HK-118W Silica Analyzer

Instruction Manual

Version: 2.3

Beijing Huakeyi Power Plant Instrument Research Institute

PREFACE

HK-118W Silica Analyzer is the latest online instrument developed by Huakeyi. It incorporates practice experience of about 10 years and the worldwide advanced technology, and can be widely used in power, chemical/petrochemical, paper/paper department, etc.

The meter features in fast response, accurate analysis and simple operation. It can meet your needs of automatism, stability, reliability and economical running.

.

This instruction manual provides information about HK-118W Silica analyzer. It is compiled for users to familiarize the structure, principle of operation and operation procedures of HK-118W Silica Analyzer. The potentially fallible and easy-to-ignore problems during operation are detailed for preventing unnecessary troubles and failures for long-term safe and reliable operation.

WARNING

Be sure to read this Instruction Manual carefully before proceeding with operation and maintenance of this instrument.

Beijing Huakeyi Power Instrument Research Institute

August 1, 2008

CONTENT

1. INTRODUCTION

1.1 Brief Introduction

The analyzer is housed in a metal enclosure with a transparent front door through which the structure of the instrument and the working state can be observed clearly, without opening the door. The instrument consists of the electric system and the flow system. The electric system is located in the up-right of the case. The rest parts are the flow system.

Fig.1. External View

1.2 Chemical principle

The chemical principle for measuring silica concentration is: under the condition of pH ranging 1.1 to 1.3, the soluble silica and ammonium molybdate will form a yellow-colored silica-molybdenum compound, then use ammonium iron(Ⅱ) sulfate to reduce the silica-molybdenum compound to silica-molybdenum blue. Measure the silica concentration through photoelectrical colorimetric analysis in accordance with the maximum absorption wave length of silica-molybdenum blue.

After rinsing the flow system with the sample, meter the volume in the mixing cup, then the reagents will be injected into the mixing cup. The quantity and time is controlled by the program for sequential chemical reactions:

a) Inject reagent 1(sulfuric acid) into the mixing cup.

b) Inject reagent 2(ammonium molybdate) into the mixing cup and mix with the acidified solution. Control time through the program. After yellow-colored silica-molybdenum compound appears, move to the next step.

c) Mix reagent 3(oxalic acid) with compound of step b), and reduce the pH down to 0.8-1.0.

d) The forth reagent(ammonium iron(Ⅱ) sulfate), the reducing agent, will reduce the yellow-colored silica-molybdenum compound into the silica-molybdenum blue.

After the reaction is finished, the colored solution will come into the photometer through the mixing valve to carry out measurement, After measuring, the waste liquid drains out through the drain out valve.
In the optical system, there is a 810nm homochromy light source and a receive unit, and colorimetric cell locates on the optical path between them. The receive unit can measure absorbability of the sample in the cell. Finally, Transfer signal to the pre-amplifier of the electric system.

1.3 Flow System

The flow system consists of Standard Solution Container, Mixing Cup, Overflow Vessel, Photometer, Stir Pump, Needle Valve, Channel Valve, Calibration Valve, Metering valve, Mixing Valve, Drain Valve, Dosing Pump and some connection tubes.

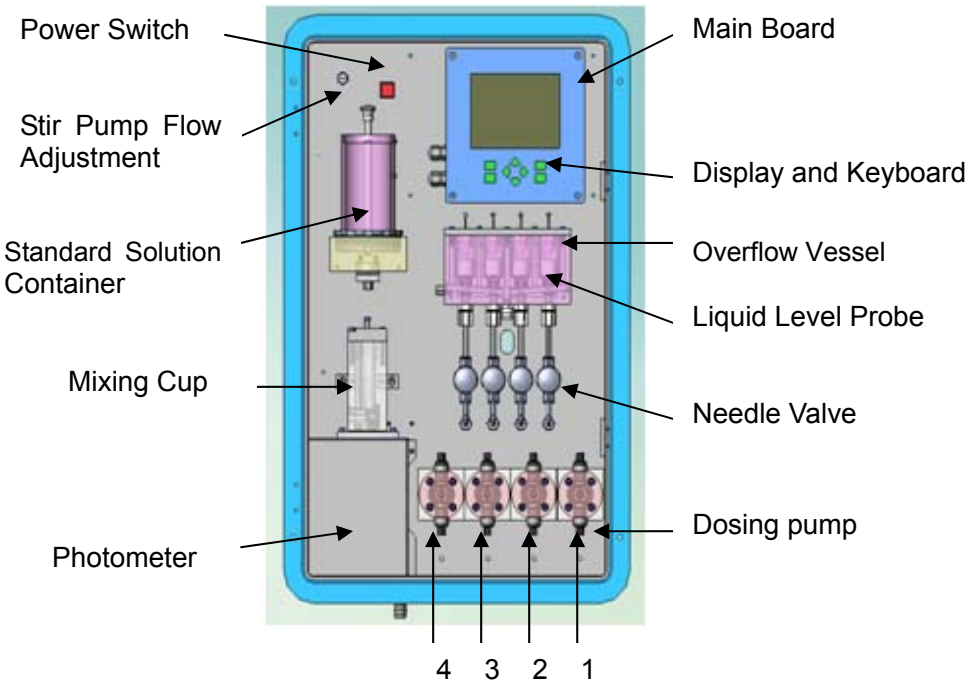

Fig.2 Front view

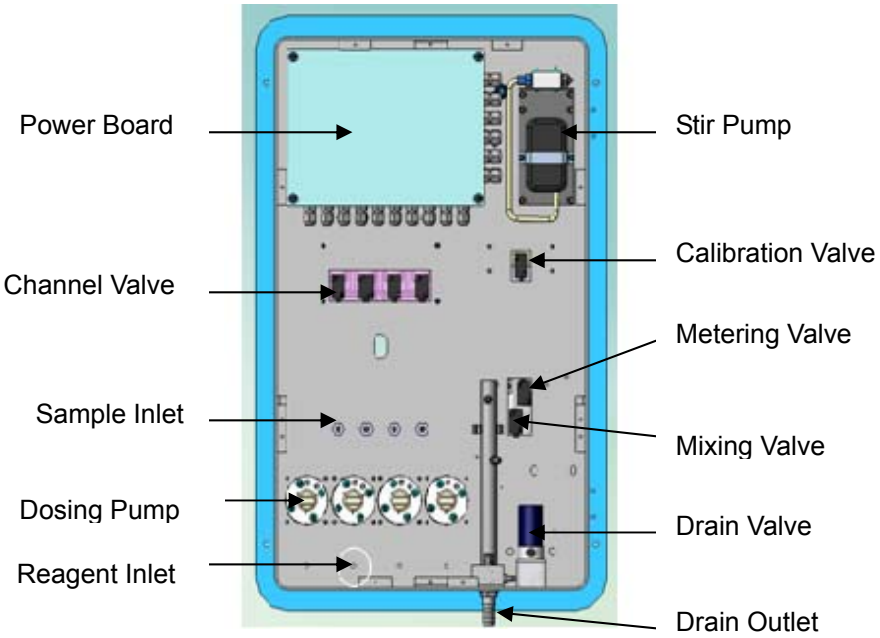

Fig.3 Back View

The system consists of the following parts:

- **Power switch**: Power on the meter.
- **Stir pump flow adjustment**: Adjust the air output of the stir pump. Better to see continuous bubbles and no boiling in the mixing cup.
- **Standard Solution Container**: Contain the calibration solution.
- **Mixing Cup**: Sequentially mix the sample and reagent and chemical reactions take place, then get the colored solution. The volume of the sample and reagents are precisely metered.
- **Photometer**: Convert the silica concentration signal into electric signal.
- **Main Board:** Main component of electric work (inside the case), mainly used for displaying, calculating, controlling etc. see 1.4.1 for details.
- **Display and Keypad**: Display data and operate the meter. See 1.4.3 for details.
- **Overflow vessel**: Provide a stable sample pressure and no flow detecting. (Each water stream should have a corresponding overflow component, the instrument can have 6 streams at most, which are, from left to right: channel 1…channel 6)
- **Liquid Level Sensor**: part of Overflow system, used to detect if there is sample in the corresponding channel.
- **Needle Valve**: Adjust the flow rate and pressure of the inlet sample.
- **Power Board:** main component of electric system (inside the case), mainly used in providing voltage, driving the corresponding pumps and valves. See 1.4.2 for details
- **Channel Valve:** choose the sample in multi-stream application, it is channel valve 6 to channel valve 1 from left to right when observe the instrument from the back, which are corresponding to the channels.
- **Sample Inlet:** Connect sample pipeline with inlet pipeline when installation, See 2.3.1 for details.
- **Dosing Pump:** Pump the reagent accurately to carry out reaction.

- **Reagent Inlet:** Get the reagents into the meter. See 2.3.2 for details. Preparations of the reagents see 3.2.1.
- **Stir Pump:** Mix the solution in the mixing cup thoroughly.
- **Calibration Valve:** let the calibration solution in the standard solution container flow into the mixing cup while calibrating or manual testing.
- **Metering valve:** Meter the volume of the sample in the mixing cup.
- **Mixing Valve**: Let the solution in the mixing cup flow into the photometer.
- **Drain Valve**: Drain out the liquid in the photometer.
- **Drain Outlet**: Drain out the measured solution and overflowed sample into the trench.

The working procedure diagram as follows:

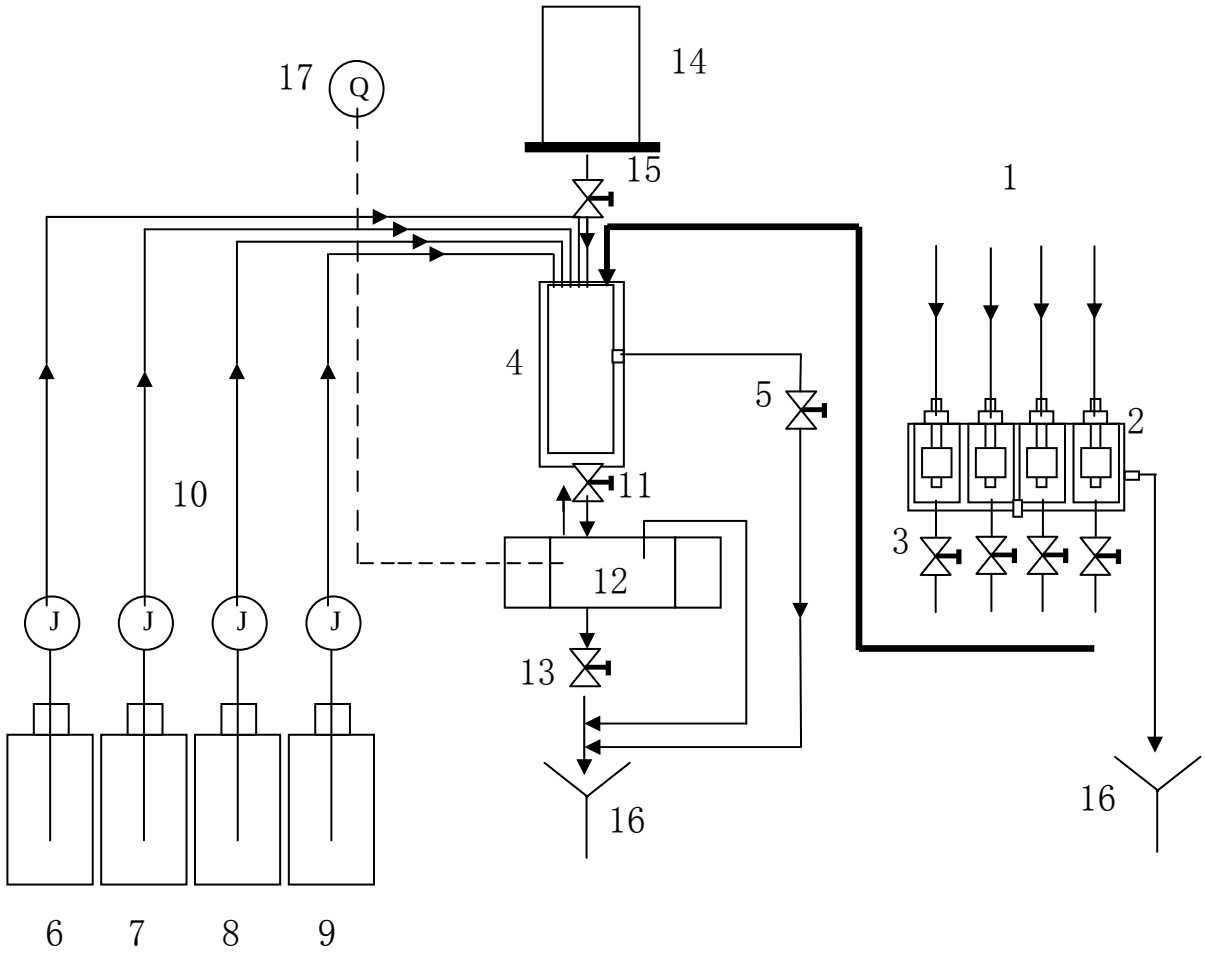

Fig. 4 Working Procedure

1. Sample
2. Overflow Vessel
3. Channel Valve
4. Mixing Cup
5. Volume Valve
6. Sulfuric Acid
7. Ammonium Molybdate
8. Oxalic Acid
9. Ammonium Iron(Ⅱ) Sulfate
10. Dosing Pump
11. Mixing Valve
12. Photometer
13. Drain valve
14. Calibration Cup
15. Calibration Valve
16. Drain Outlet
17. Stir Pump

The pretreated sample comes into the overflow vessel and flow circularly to ensure continuous typical sample. The sample out of overflow vessel will flow into mixing cup at a constant pressure and flow rate.

Before metering the volume of the sample, it is used for rinsing the mixing cup and the colorimetric cell. When start metering volume, the metering valve opens and part of the sample drain out, a fixed volume of sample left. Then the sample react with the reagents pumped through the dosing pump, the quantities of the reagents are precisely metered to ensure the accuracy of the measurement. After the colored solution flow into the photometer and get measured, it will drain out through the drain valve.

The signal from the photometer will transfer to electric system, after processing, the output signal get A/D converted by the main board and then sent to CPU and display on a 320×240 back-light LCD. Meanwhile, the power board provides isolated current output for the remote recorder/indicator or the data processor.

Each water stream has an out-of-sample detector in the overflow vessel. When it is out of sample, the detector will find out immediately and display a warning signal on the LCD screen. Meanwhile, the power board provides an out-of-sample alarm relay contactor for the remote recorder / indicator or data processor.

1.4 Electric System

The electric system includes: Main Board, Power Board, Display Unit, Signal Line, Photo-electric Converter etc. The SCM system controls dosing of the Channel Valves, Calibration Valve, Metering Valve, Mixing Valve, Drain Valve, Stir Pump and Dosing Pump. Also, sample status detection, analog data acquisition, (4-20)mA isolated output of CH1~CH6, limit-exceed alarm and out-of-sample alarm are finished by electric system. The Power Board, at the back of the electric box, includes power supply terminals, relay output terminals, (4-20)mA current outputs of 6 channels, limit-exceed alarm outputs of 6 channels and out-of-sample alarm outputs of 6 channels.

The main function of the electric system is to control the flow system to accomplish the set measurement task; to process signals sent from the flow system and display them on the screen; to provide proper outputs (Including current outputs and relay-contactors) for external equipments; to store the measured results for future retrieval; to set program parameters by operators and to provide necessary information for operator to judge the instrument's working state.

Fig. 5 Block diagram of the system

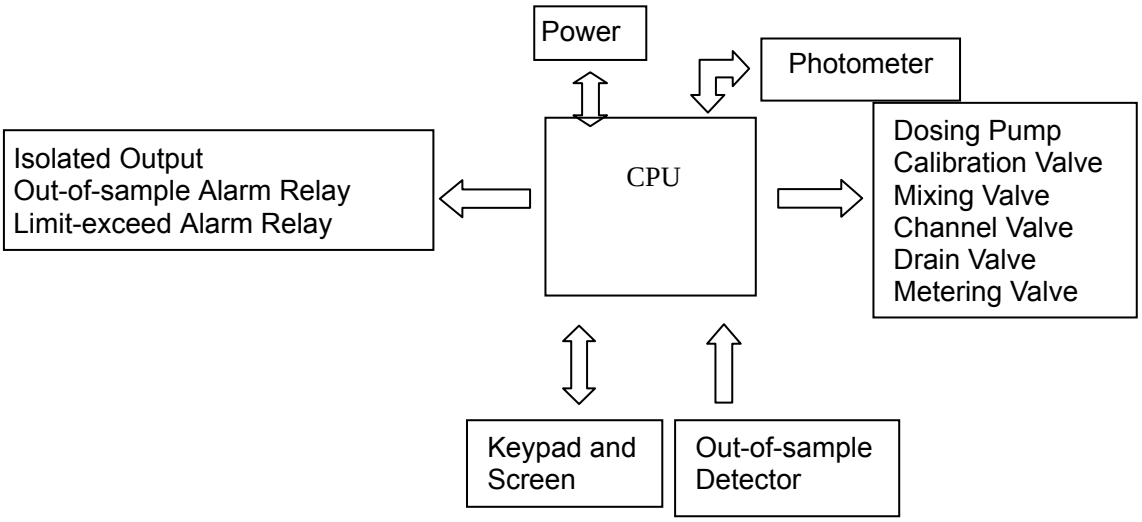
Power
Photometer
Isolated Output
Out-of-sample Alarm Relay
Limit-exceed Alarm Relay
CPU
Dosing Pump
Calibration Valve
Mixing Valve
Channel Valve
Drain Valve
Metering Valve
Keypad and Screen
Out-of-sample Detector

1.4.1 Main Board

Most job of the instrument are accomplished by the main board, such as: Pre-amplifying, A/D converting, Data processing, Flow System controlling and Display controlling.

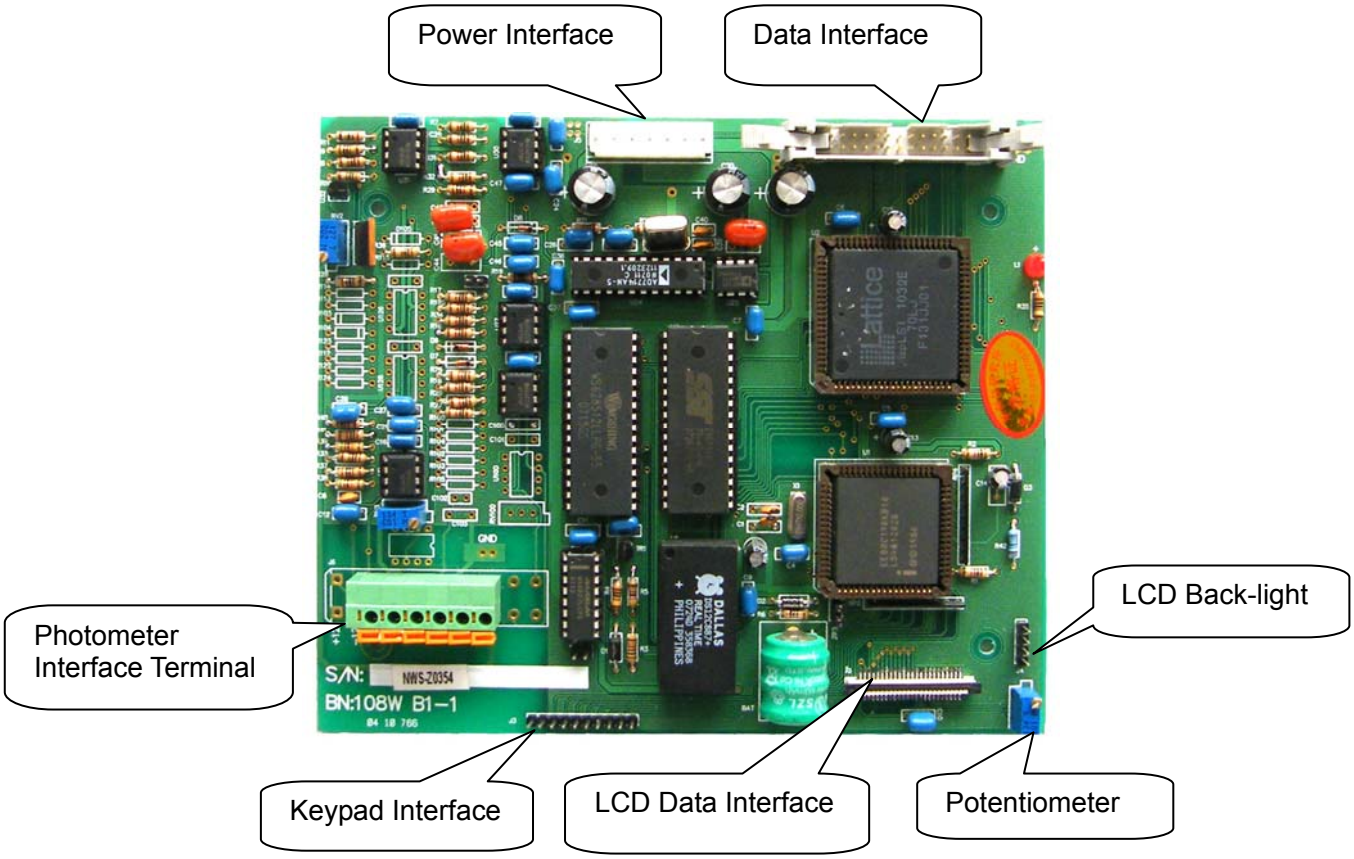

Fig. 6 Main Board

- Power interface: Connect with J5 of the power board by 7-core power cable, form left to right: +12V, AMFGND, -12V, GND, GND, VCC, VCC.
- Data interface: Data Connection between main board and power board, connect with J1 of the power board.
- Photometer interface terminal: Connect with photometer, from left to right: READ, AMFGND, N/A, AMFGND, LED+, LED- and must be connected with J6-1, J6-2, N/A, J6-4, J6-5, J6-6 of cable J6 respectively.
- Keypad interface: Connect with the wire from keypad.
- LCD data interface: Connect with the digital wire of the LCD.
- Potentiometer: Adjust the brilliance of the LCD, the upper connect with the red wire and the lower with white wire.
- LCD back-light: Connect with backlight, the upper connect with the positive(red wire).

1.4.2 Power board

It provides power for the Main Board, LCD, Solenoid Valves, Metering Valve and drives all electric components of the flow system, including the Dosing Pump, Calibration Valve, Metering Valve, Mixing Valve, Channel Valve, Drain valve, etc. The isolated current output unit is also located on this board.

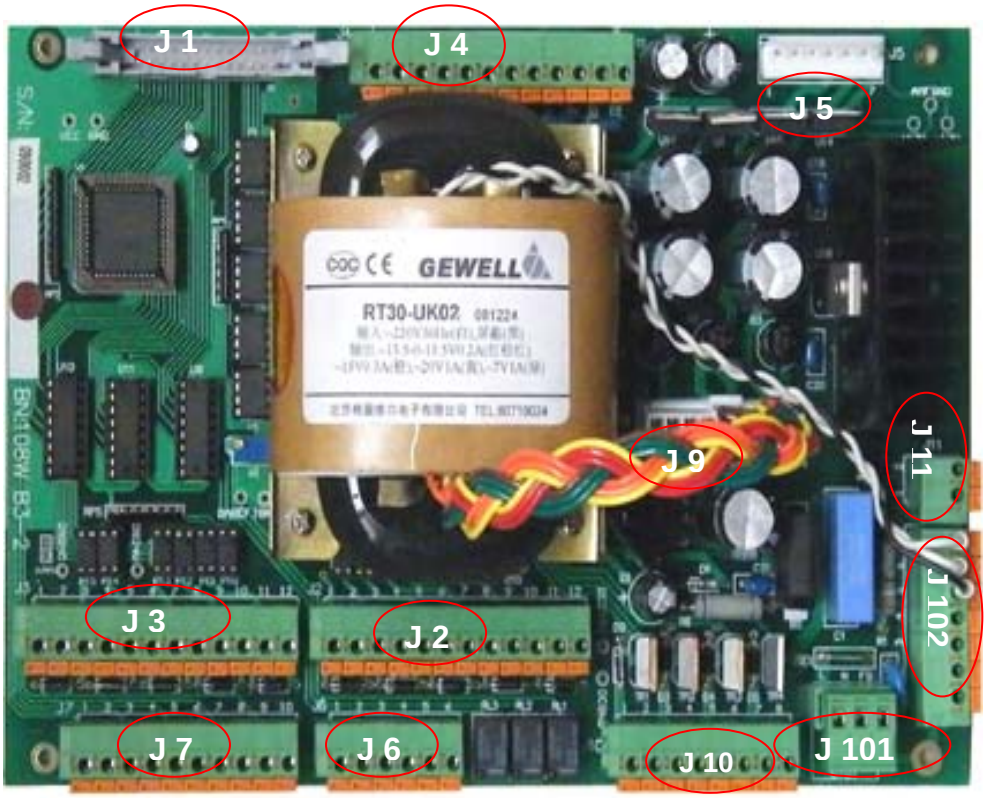

Fig. 7 Power board

J1: Connect with data interface of main board, 26 pins horn socket, connect with flexible flat cable.

J2: Terminals for solenoid valve and liquid level switch in single-channel application. Refer to 2.4.2.1 for details.

J3: Terminals for multi-channel solenoid valves. Refer to 2.4.2.2 for details.

J4: Terminals for isolated current outputs. Refer to 2.4.1.2 for details.

J5: Connect with the power interface J5 of the main board by 7-core power cable, from left to right: VCC, VCC, GND, GND, -12, AMFGND, +12.

J6: Terminals for alarm relay. Refer to 2.4.1.3 for details.

J7: Terminals for multi-channel liquid level detector. Refer to 2.4.1.2 for details.

J9: The secondary interface for transformer, from left to right: 15V, 20V, 13.5-0-13.5V, 6.5V. The line colors: orange, orange, yellow, yellow, red, red, brown, green, green.

J10: Terminals for dosing pump (2 lines). Refer to 2.4.2.3 for details.

J11: Terminals for gas pump, and provide power to air pump.

J101: Power supply terminal. Refer to 2.4.1.1 for details.

J102: Power line terminal, from top to bottom: transformer (white, white, black), power switch out (blue, red), power switch in (blue, red).

1.4.3 LCD and Keypad

The 320x240 back-light lattice LCD can show full information about the instrument.

There are 8 keys on the front panel and their respective functions are:

→ Four direction keys: up, down, left, right

- Move the cursor to the selected position.
- If press the Up or Down key when a calibration finished, all the Calibration Valve, Metering Valve, Mixing Valve and Drain Valve will be opened to rinse the flow system.

→ Modify the value of the selected parameter or choose the selectable parameter.

→

- Validate the selected function or enter to the submenu.
- In the “Single Channel Display” and “Multi-channel display”, you can enter “History Curve” by pressing this key.

→

- Return to the previous menu.
- In the “Single Channel Display” and “Multi-channel display”, you can enter “History Event” by pressing this key.

2. INSTALLATION

2.1 Location

Before installation, consider the following precautions:

- Place the analyzer close to the sample point to reduce the response time.
- Choose a clean, well ventilated and vibration-free location.
- Ensure no corrosive gases or vapors in the room, such as chlorination devices or chlorine cylinder.
- It is also advisable to have adjacent drains near ground sewer to make sure waste drain out from the analyzer as short as possible, together with maximum fall.
- Enough space which is at least equal the size of one whole instrument body at the back is required and both sides must be reserved for operation and observation.
- The ambient temperature can not exceed 45℃. If the temperature is below 5℃, the analyzer should be installed in a heated cabinet.

2.2 Mounting

There are two modes to install this instrument: panel mounting and independent mounting (It should be confirmed when ordering). The location of the instrument is preferred higher than (50～90)cm from the ground. The reagent container must be placed under the instrument and lower than at least 10cm from the bottom plate of the instrument.

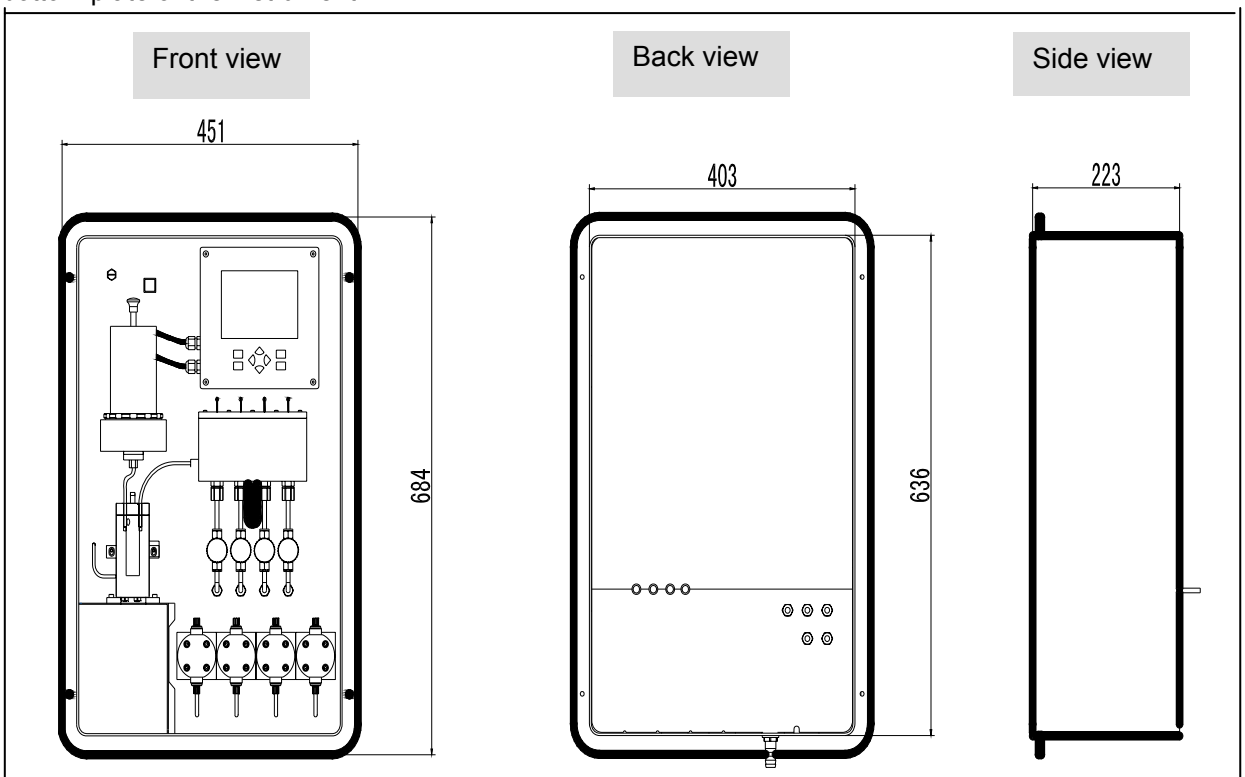

Fig.6 Overall size of analyzer

Drill a hole of 645mm×410mm in the panel, then drill four Φ6 through-holes, and fasten it with four screws.

2.3 Pipe Connection

Be careful while connecting the pipeline, any misconnection will make the analyzer unable to work.

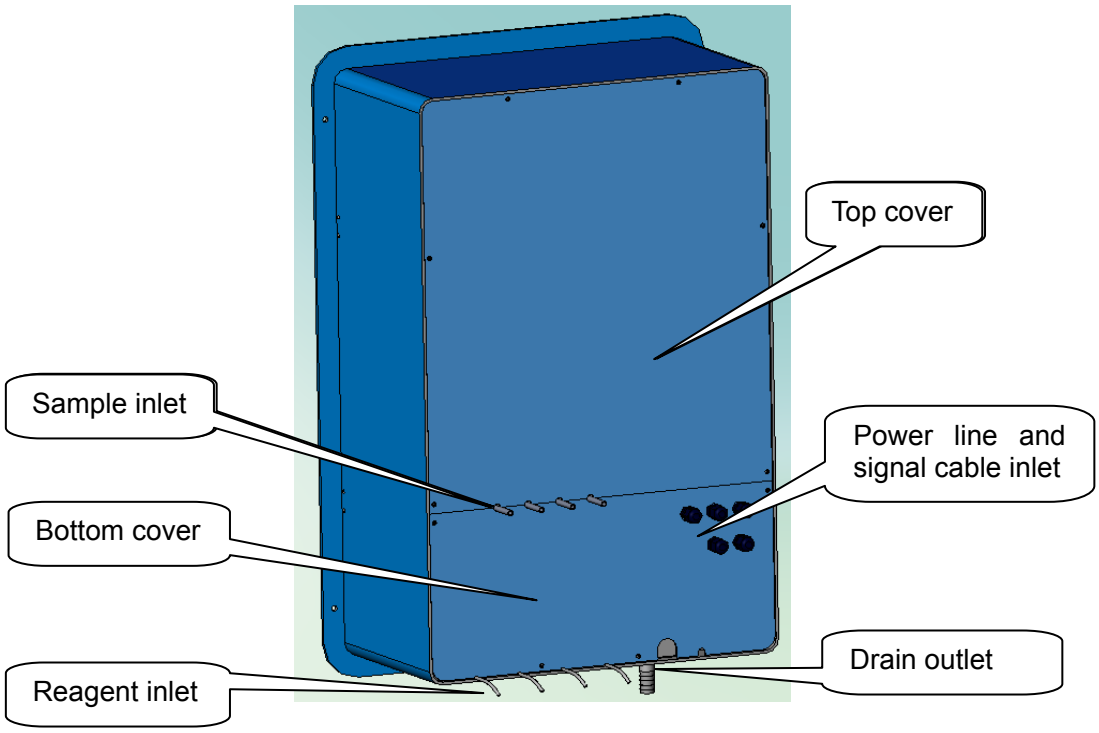

Fig.9 Pipeline Connection

2.3.1 Sample connection

Rinse the pipeline thoroughly before supplying the sample to the analyzer to avoid contamination.

The sample should be homogenous and representative. Particles in the sample must not exceed 5μm and the concentration should be less than 10mg/L. A valve on the upstream is necessary to supply water at a constant pressure.

The sample is also required to conform to the following conditions:

- Sample temperature should be within the range 5℃ to 50℃.
- The sample flow rate should be kept within the range 150m～300mL/min.
- For those high temperature and high pressure samples, their pressure and temperature should be properly reduced.
- Sample pressure should be lower than 0.6MPa and keep stable.

For sample pipeline, use #316 stainless steel tube with the size of (6 x 1) mm. The flow rate is adjusted by the Needle Valve.

While installing, use the Φ6 connector to connect the sample tube with the “Sample Inlet” tube. If the diameters are not matched, choose a proper connector or weld them together.

2.3.2 Reagent connection

The reagents are pumped into the analyzer by the Dosing Pump, the tubes locate at the rear bottom of the instrument.

1. Take out four reagent tubes delivered with instrument, the size matches exactly with the connector of Dosing Pump.
2. Respectively connect the reagent tubes with the connector of Dosing Pump.
3. Put the reagent tube into corresponding reagent container (better to use 3L or 5L polythene container).

2.3.3 Drain liquid Connection

Drain outlet is located at the rear bottom of the analyzer and is carried out with a 2m drain pipe(Φ16 plastic tube) delivered with the analyzer. The tube should be at atmospheric pressure and not be looped.

When connection finished, check if all the connectors are tight enough, make sure there is no leakage.

2.3.4 Installation of water pre-treatment device

For some applications with poor working conditions, large sample pressure variation, flow instability, frequent start or stop, or high impurity in the sample etc, these will lead to flow break or blockage in flow way, which makes the measure unable to be carried out normally. A water pre-treatment device is necessary under these conditions.

Installation of water pre-treatment device is consisted of storage tank, T-junction and filter.

Note

The figure below shows the instrument installed on the housing of the case, if the meter case was not ordered, please find a proper place to install the water pre-treatment device.

When installing water pre-treatment device, the sample tube will not connect to the sample inlet but the bottom of filter by a nylon hard tube. The filter will eliminate the impurity in the sample, then the filtered sample flow to the T-junction and sample water divided into two streams, one stream flows to the analyzer for measurement, and the other to the storage tank, so when the sample flow is large, part of the sample flows to the tank, and when the flow is small, the tank will supply the stock sample to the analyzer. In this way, the analyzer will get a stable flow rate.

The filter may get blocked by the impurities after a period of time, the user needs to remove the filter core and rinse it with clean water. And the rinse cycle will get more and more frequent, when it gets too frequent, you should consider replacing a new core.

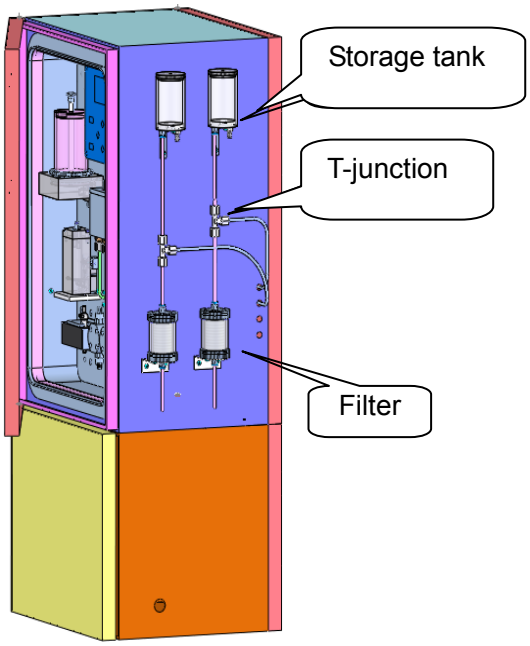

2.4 Electric Connection

WARNING

Do not apply power to the analyzer until all the installations and connections are completed and checked.

The connections must follow the regulations and comply with the connecting diagram in the manual.

2.4.1 User electric connection

User electric connection is to carry out connection after installation, there are: power connection, (4~20) mA output signal connection, alarm signal connection etc.

Electric connection refers to “Fig.9 pipeline connection”. Open the top cover from back of the analyzer (fastened with 6 cross panel screws), put the cable through the “power and signal line inlet” and extend to the power board (refers to “fig.3 back view”), which is located on the top left corner of the case, unscrew the 4 screws then you can see circuit board.

2.4.1.1 External power connection

Power terminal locates on the right bottom of the power board, all the wiring should be the same with terminal polarity.

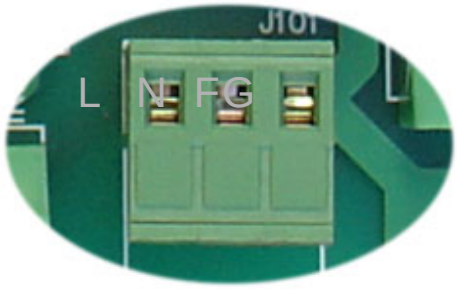

Connection order from left to right：**L** — Live, **N** – Neutral, **FG** – Grounding

*** Make sure the Grounding wire is reliable.**

2.4.1.2 Isolated current output Connection

Isolated current output terminals from left to right: Channel 1 to Channel 6. There are 12 holes, the left side is positive and right is negative.

Terminal block(J4)	**Definition**	Ch. 1		Ch. 2		Ch. 3		Ch. 4		Ch. 5		Ch. 6	
		+	-	+	-	+	-	+	-	+	-	+	-
	Order No.	1	2	3	4	5	6	7	8	9	10	11	12

WARNING

Use shielding cable, and single termination to the ground so as to shield.

2.4.1.3 Alarm relay output connection

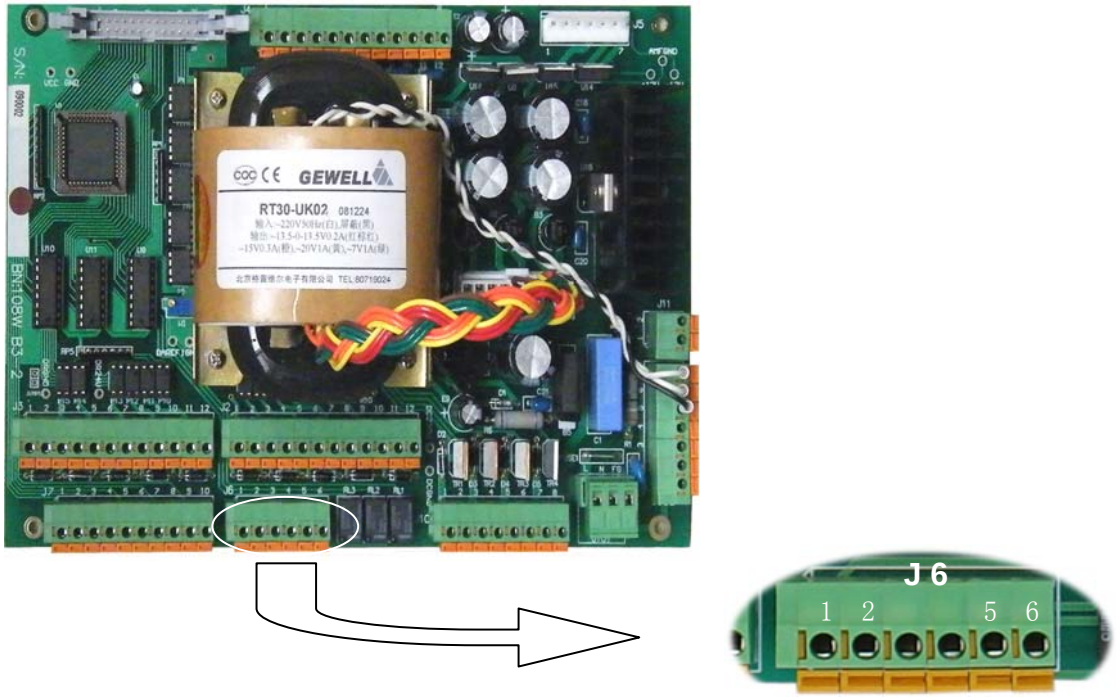

Three alarm outputs from left to right: high alarm, N/A, out-of-sample alarm. Any alarm in the channel will lead to the movement of corresponding relay.

Terminal block (J6)	**Definition**	High-Limit alarm		N/A		Out-of-Sample alarm.	
		COM	NO	COM	NO	COM	NO
	Order No.	1	2	3	4	5	6

WARNING

High alarm and out-of-sample alarm will provide lower power switch signal for users, if you want to control high power instrument, increase intermediate relay to improve the load capacity.

If the relays are used to switch loads on and off, the relay contacts will be eroded by arcing. Arcing also generates radio frequency interference (RFI) which can result in instrument malfunctions and wrong display. To minimize the effects of RFI, arc suppression components are necessary. Resistor/capacitor networks for A.C. applications and diodes for D.C. applications. These components can be connected either across the load or directly across the relay contacts.

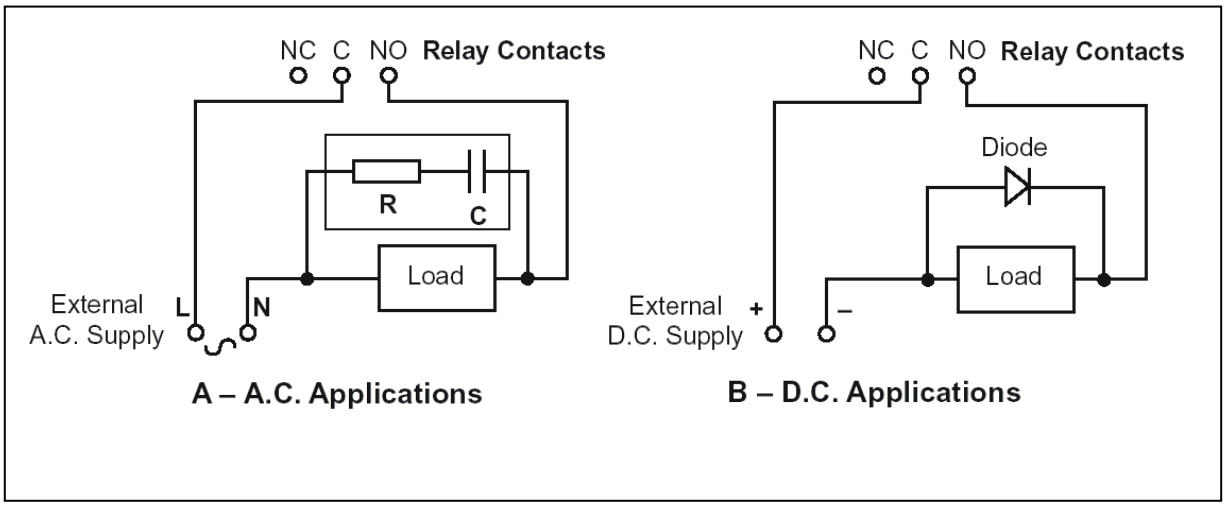

Figure 2.1 Relay contact protection

For A.C. applications, the value of the resistor/capacitor network depends on the load switch current and inductance. A 100Ω /0.022μF RC suppressor unit can be used at the beginning as shown in Fig 2.1**A**. If instrument malfunctions or wrong display occur, it means the RC network value is too low and should be changed. If the correct value cannot be obtained, please contact the manufacturer for details that RC unit required.

For D.C. applications, fit a diode as shown in Fig 2.1**B**. IN5406 type is generally used in diode (inverse voltage 600V, 3A).

2.4.2 Factory electric connection

NOTE

Factory electric connection has already finished and there's no need for users to carry out, it's only used in meter maintenance.

2.4.2.1 Singe-channel solenoid valve and liquid-level switch connection

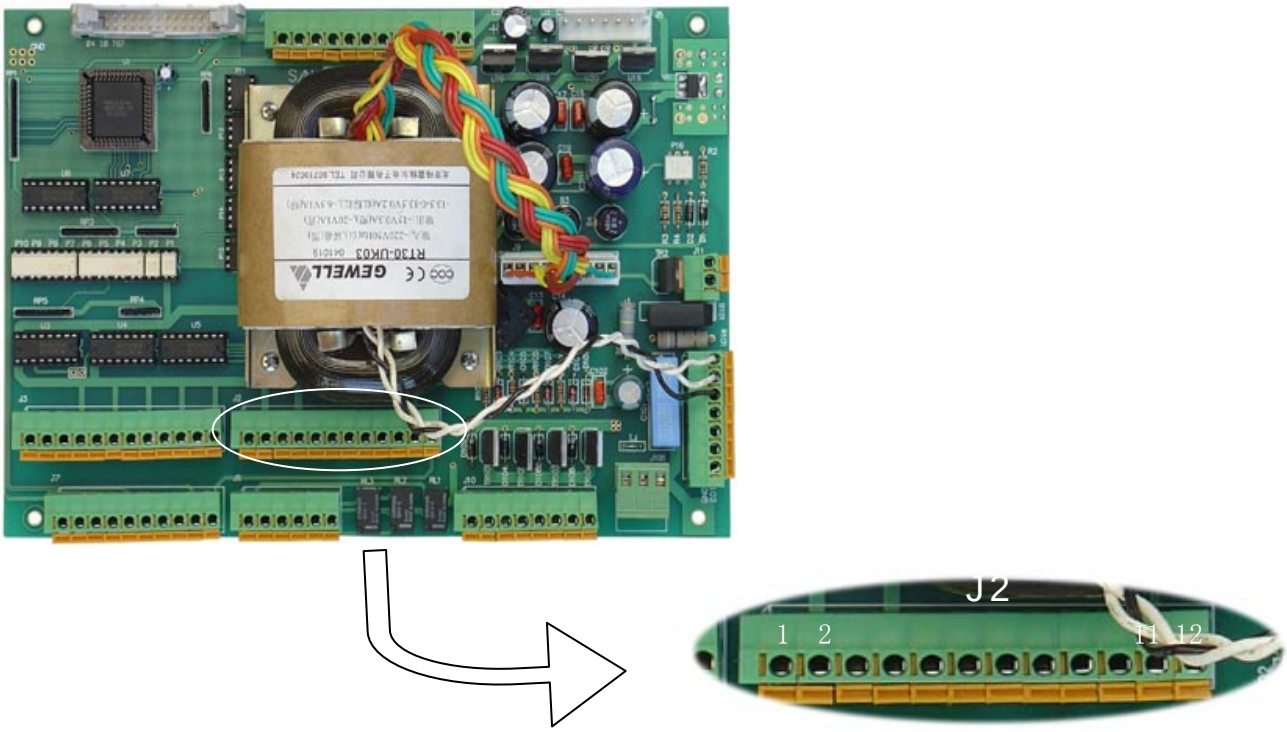

Terminal block(J2)	Definition	Channel 1 Valve		Calibration Valve		Mixing Valve		Drain Valve		Metering Valve		Liquid Level P(Ch. 1)	
	Order No.	1	2	3	4	5	6	7	8	9	10	11	12

2. 4.2.2 Multi-Channel Solenoid valve and Liquid Level Sensor Connection

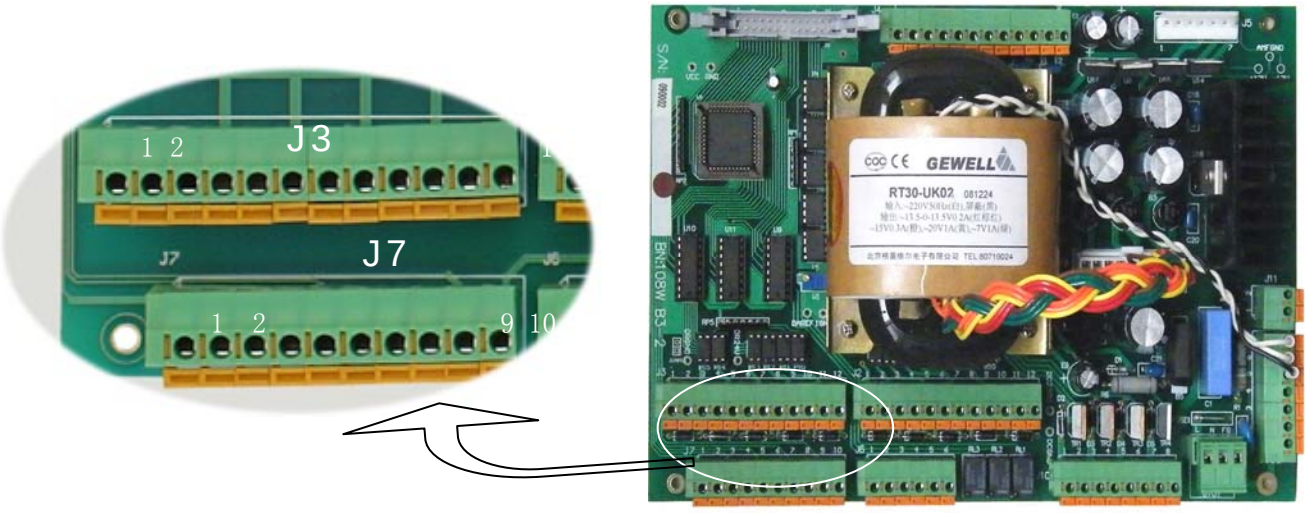

The upper blocks are channel valve terminals, the left two wires are blank. The lower blocks are Liquid Level Sensor terminals:

Terminal block (J3)	**Definition**	N/A		Channel6 Valve		Channel5 Valve		Channel4 Valve		Channel3 Valve		Channel2 Valve	
	Order No.	1	2	3	4	5	6	7	8	9	10	11	12
Terminal block (J7)	**Definition**	Liquid Level Sensor (Ch6)		Liquid Level Sensor (Ch5)		Liquid Level Sensor (Ch4)		Liquid Level Sensor (Ch3)		Liquid Level Sensor (Ch2)			
	Order No	1	2	3	4	5	6	7	8	9	10		

2.4.2.3 Dosing Pump Connection

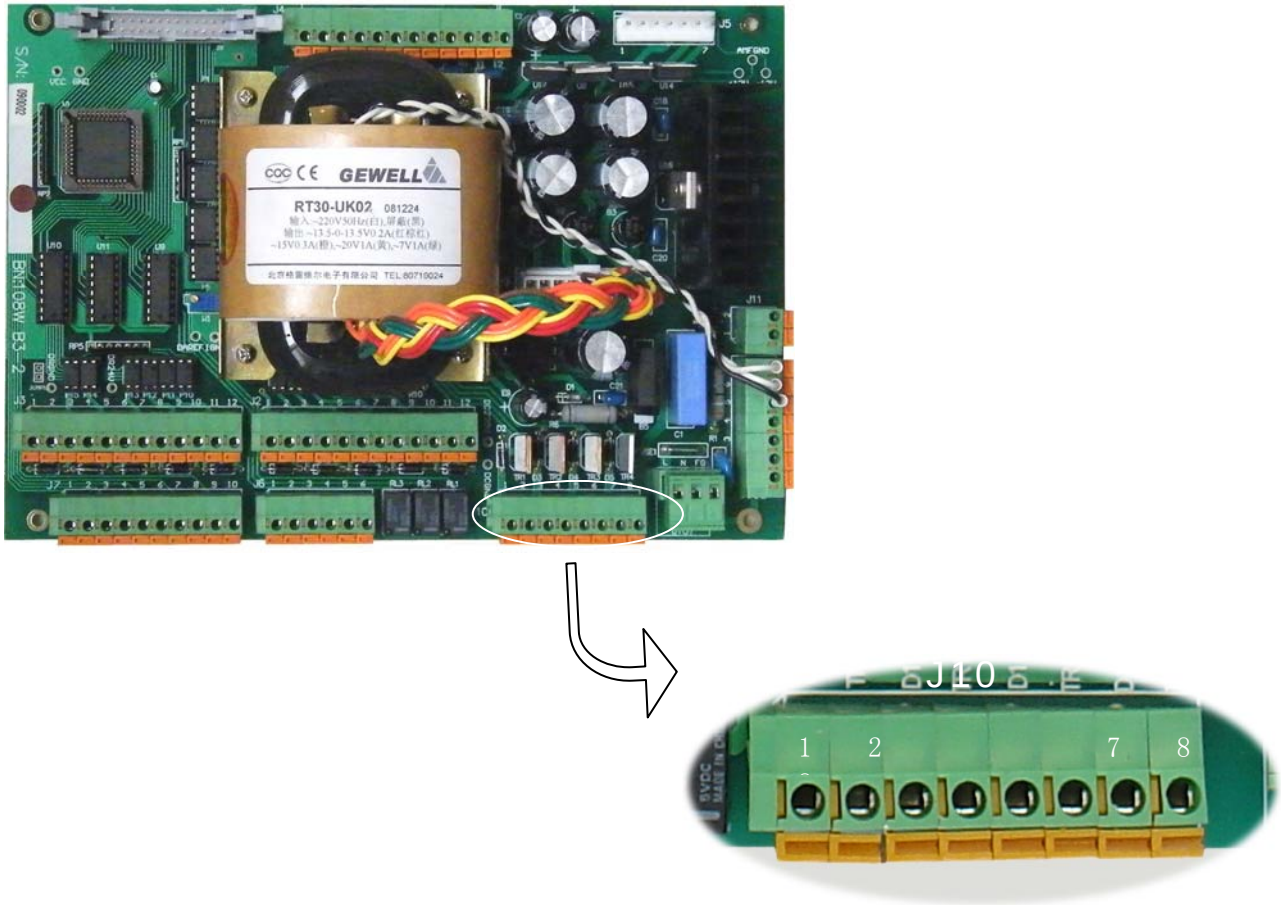

Terminal block (J10)	Definition	Pump 1		Pump 2		Pump 3		Pump 4	
		+	-	+	-	+	-	+	-
	Order No.	1	2	3	4	5	6	7	8

2.4.2.4 Power switch terminal and stir pump terminal

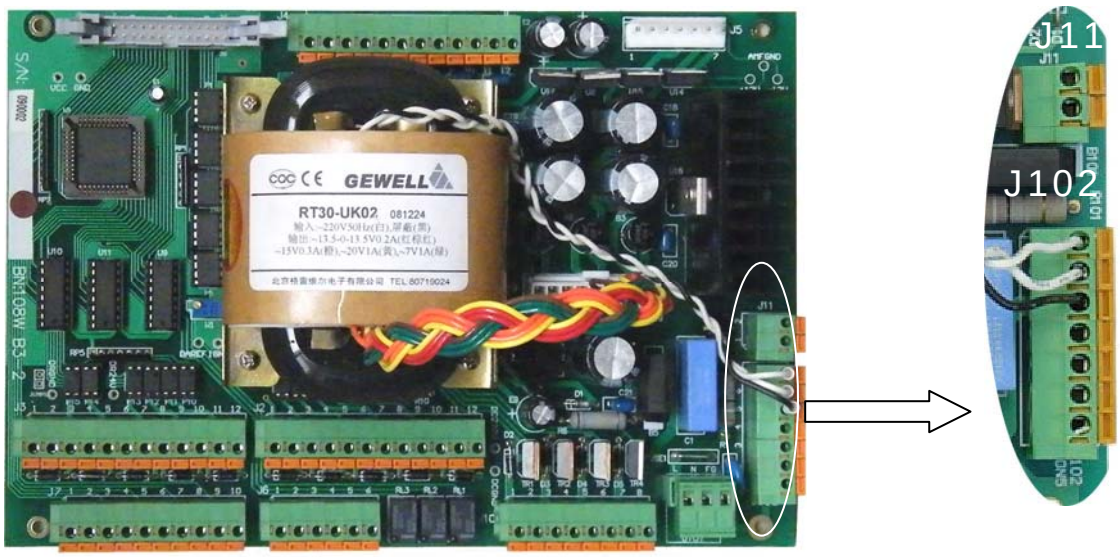

J 102 is the terminal of transformer and power switch, order from top to bottom is transformer (line color: white, white, black), power switch out (line color: blue, red), power switch in (line color: blue, red).

J 11 is the Mixing Pump terminal without polarity requirement.

3. PREPARATION FOR REAGENTS AND STANDARD SOLUTION

3.1 General Description

The reagent should be stored in a special label marked plastic bottle with volume of 3L. Before use, wash the bottle with detergent and water, and then rinse several times with de-ionized water. All the reagents should be fresh and the quality grade must be high enough for the best analysis results. The sample water must be of ultra purity. It is better to use de-ionized water produced by high performance mixing-bed ion exchange device (Its conductivity is less than 0.2 us/cm).

NOTICE

Be sure to read instruction about health and safety precaution before preparing the reagents, put on exposure suit and take measures to protect eyes.

3.2 Preparation Method

3.2.1 Reagents Preparation

Chemicals required: Ammonium Molybdate: $(NH_4)_6M_{07}O_{24}4H_2O$

Ammonium Iron(Ⅱ) Sulfate: $(NH_4)_2Fe(SO_4)_2 \cdot 6H_2O$

Oxalic Acid: $H_2C_2O_4 \cdot 2H_2O$

Sulphuric Acid: H_2SO4（98％）

NOTE

Take 4×1L for example, preparation of other volume can be derivated to the ratio.

- **Reagent 1**: Sulfuric Acid:

Weigh 50mL Sulfuric Acid（specific gravity:1.84）and slowly pour into 800mL de-ionized water under continuous stir, cooling it down to room temperature, then dilute it with de-ionized water to 1 L.

- **Reagent 2**: Ammonium Molybdate:

Weigh 50g Ammonium Molybdate $[(NH_4)_6MO_7 O_{24} .4H_2O]$ and dissolve it into 800mL de-ionized water, then dilute it with de-ionized water to 1 L.

- **Reagent 3**: Oxalic Acid:

Weigh 80g Oxalic Acid and dissolve it into 800mL de-ionized water, then dilute it with de-ionized water to 1 L.

- **Reagent 4**: Ammonium Iron(Ⅱ) Sulfate

Weigh 12mL sulphuric acid（H_2SO4, 98％）and slowly pour into 600mL de-ionized water under continuous stir, cooling it down to room temperature, then weigh 12g Ammonium Iron(Ⅱ) Sulfate to dissolve into it and dilute with de-ionized water to 1 L.

3.2.2 Preparation method for standard solution(1000mg/L)

- Method 1: (high precision)

Weigh 1.000(±0.001)g silicon dioxide(High-Class Purity) which has been baked under (700~800)℃, and (7~10)g anhydrous sodium carbonate powder which has been baked under (270~300)℃, mix them in a platinum crucible and then melt it for 2.5 hours under the temperature of (900~950)℃. After cooling down, put the crucible into a hard beaker and dissolve the melted stuff with hot ultra purity water, then put the beaker on a water bath and continuously stir. After the melted stuff is totally dissolved, take the crucible out and rinse the crucible with ultra purity water carefully.

When the solution is cooling down to room temperature, move it into a volumetric flask of 1 L, and dilute it with ultra purity water to the scale , after being well-distributed then move it into a plastic bottle for storage. This solution should be fully transparent. If not, it should be prepared again.

- Method 2: (Low precision)

Weigh 3.133(±0.001)g highest purity sodium fluorosilicate(Na_2SiF_6) and pour it into 600mL ultra purity water, then move it into a flask and dilute it with ultra purity water to volume of 1 L. With this method you can also get 1000mg/L SiO_2 solution. It should be stored in a polyethylene tank.

When calibration, properly dilute the standard solution with ultra purity water. During the preparation, polyethylene container should be used to avoid any contact with glass containers. All the standard solutions must be stored in tight covered polyethylene tanks. In this way, the solution can be stored for one year. But for the standard solution lower than 1mg/L it should be prepared when it is needed. When the standard solution of concentration lower than 100mg/L is required, the ultra purity water with acceptable background silica concentration for calculation is recommended.

Note: The so-called high purity water is secondary deionized water which contains the SiO_2 background less than 5ug/L.

WARNING
Be careful to take concentrated Sulfuric Acid, when diluting, **Sulfuric acid must be poured into water, absolutely not water pour into sulfuric acid.**

4. PROGRAMMING

4.1 Power on

Apply power to the meter after all the installations are verified and reliable. Power on and the welcome interface appears.

HK-118W SILICA ANALYZER

Software Version: 2.0

Beijing Huakeyi Power Plant
Instrument Research Institute
HTTP:// WWW. HUAKEYI.COM
010-80705660

The welcome interface will last for 6s, then go into the single channel display automatically.

Note: Before power on the meter, Press + key and key simultaneously will lead to reset. In this way, all the parameters can be recovered to factory default values, and all the stored data will be cleaned.

4.2 Program Unit

4.2.1 Single Channel Display

Power on the meter and the welcome interface will last for 6s. Then the meter automatically enter to Single Channel Display:

Sampling Channel: 2 0415/0600s
Display Channel: 1

3.6 μg / L

Blank : 4502 mV
Measure: 2703mV

2008-06-02 14: 32: 42

- Press “Enter” key to enter “History Curve” submenu.
- Press “Esc” key to enter “History event” submenu.
- Press + − keys to switch between “Single Channel Display” and “Multi-Channel Display”.
- Press Up, Down, Left and Right cursor keys to enter “Password” interface, input correct password to enter the Main menu.

Single channel display:

- “Sampling Channel”: Indicate its measuring channel. It’s channel 2 as shown in the figure.
- “Display channel”: Indicate channel value. It’s channel 1 data as shown in the figure.
- “Display value”: Display measured results. It’s 3.6ug /L in the figure.
- “Measure process”: Display time for a measure on the top right corner (It’s 600s as shown in the figure) and the already spent time.
- “Blank”: Voltage value for sample without any reagent in it. It’s used in shielding measurement error caused by zero drift and sample turbidity. It’s 4502mV as shown in the figure.
- “Measure”: Display current actual voltage without start up the manual test.

  When start up manual test, display not only current actual voltage but also measured voltage that involved in calculation.
- “System time”: Display the date and time at the bottom of the screen.

In some case, it will display the following contents:

- “Out-of-Sample”, “High Alarm” and “Low Alarm”, indicate this alarm has already happened, inquire in multi-channel display for specific channel. It only alarms when there is corresponding alarm condition. Meanwhile, “High Alarm” and “Low Alarm” will disappear when “Out-of-Sample Alarm” happens.
- Enter this interface whenever calibration process start. “Sampling Channel” and “Display Channel” will not appear, the corresponding appearance are “zero calibration (indicate it’s carrying out zero calibration), “slope calibration”, “initial zero”, “ initial grade 1,2,3,4…”.

4.2.2 Multi-channel display

In “Single Channel Display” interface, press + , − keys to switch to “Multi-Channel Display” interface. The following is “Multi-Channel Display”:

2008/06/01 15:34

Channel	1	2	3	4
Time	15:.00	15:10	15:20	15:30
Conc	3.6	4.2	1.8	2.3
Unit	μg/L	μg/L	μg/L	μg/L
Alarm				
Sample				

Last Calibration: 2008/05/08

In “Multi-Channel Display” interface, the key functions are the same with those of “single channel display” refers to fig 4.2.1:

- System time: Display the current system time and date on the top of the screen.
- Channel: The current channel should be the same with “Channel and Alarm Setup”, if select channel 1 as open, it will only display the corresponding parameters of Channel 1.
- Time: The time when finished measurement.
- Concentration: The value of actual measurement, reflecting the sample state of this channel.
- Unit: The measure unit of Phosphate analyzer is mg/L.
- Alarm: “High Alarm” will display when the measured value is higher than the setup concentration, and the corresponding relay will react.
- Sample: Display “Out-of-Sample Alarm” when there is no sample or not enough sample for measure, this channel will stop measuring and leap to the next channel. If there is no flow in the start up channel, the meter stops measuring.
- Last Calibration: The last calibration time of the meter.

4.2.3 Main Menu

In the running picture, press any direction key to input the correct password, then validate with “Enter” key to enter the main menu.

Main menu

1. Channel and Alarm Setup
2. Calibration
3. Hardware test
4. Parameter Setup
5. History Curve
6. History Event

4.2.4 Channel and Alarm Setup

In the main menu, move the cursor to “Channel and Alarm Setup”, then press “Enter” key to enter channel and alarm setup submenu, showing below:

Channel and alarm Setup

Channel	1	2	3	4	5	6
State	Run	Run	Run	Run	Stop	Stop
O.P. Span	0100	0100	0100	0100		
O.P. Zero	0000	0000	0000	0000		
High Alarm	0020	0020	0050	0050		
Level Alarm	on	on	on	on		
O.P. type	4-20	4-20	4-20	4-20		
O.P. test	online	online	online	online		
Ch. time	10	10	10	10		

Among which:

State: There are 2 states, "Run" and "Stop". Select "run", this channel will work. Select "Stop", the channel won't work, and the parameters will not display.

O.P. Span: The maximum value of current output which corresponds to the high-limit of output type. Range: 20-2000, (step: 10, default: 100).

O.P. Zero: The minimum value of current output which corresponds to the low limit of output type. Range: 0.0~ (O.P. Span deducts 10), (step: 10, default: 0), For example: the O.P. Span is 100, the O.P. Zero is 0, the O.P. Type is 4~20, then 0.0ug / L corresponds to 4mA, and 100ug / L corresponds to 20mA.

High Al.: Set high alarm of the channel, (range: 5~2000, step: 5, default: 100). If it reaches to 2000 and still increases, it will display "OFF".

Level Al.: It will decide if the "Out-of-Sample test" is open. There are two states: On/Off. When set as "On", it will display "Sample Alarm" when there is no sample in some channel, this channel will stop measuring and leap to the next channel, and the corresponding relay will react. When set as "Off", the meter will work normally no matter there is sample or not.

O.P. Type: Set current output type. There are 3 options: (4~20)mA, (0~20) mA and (0~10)mA.

O.P. Test: Manually test the current output of the channel, there are 3 states:

Output range: 0~100%, Step: 10%.

Online output: When it reaches 0% and still decreases, it will display "Online". The online output will be corresponded to the test value and parameters.

Output maintenance: This function is effective only when selecting it in this submenu.

Channel time: Time spent in this channel for a measurement, range: (10～60)min, step: 1 min.

After the data in this menu is revised, press "Enter" to store and return to the main menu.

4.2.5 Calibration

In the main menu, move the cursor to "Calibration" and validate with "Enter" to enter "Calibration" submenu, showing below:

Calibration

Last Calibration:	2008/05/08 15:34
Standard Solution:	40 μg / L
Calibration Type:	Zero
Auto Calibration:	Off
Calibration interval:	24 hours
Background Comp.:	Off
Manual Test:	Disable
Manual Calibration:	Run
Initial Calibration:	Run

Zero:	0 μg / L	2037	0.0
Slope:	80 μg / L	1015	1.00

Among which:

Last Calibration: The time of the last calibration. It can not be revised manually.

Standard Solution: Set the concentration of standard solution used for calibration. Range: 1~2000ug/L, Step: 1ug/L.

Calibration type: There are 3 types: Zero, Slope and Zero＋Slope.

Auto Calibration: It's used to decide whether to start "Auto calibration" or not. There are 2 status: "On" and "Off", refers to 5.2.3 for details.

Calibration Interval: Set the period of Auto Calibration, Range: (1~255) hour, Step: 1 hour.

Background Compensation: It is used to calculate silica content in the water for standard solution preparation, and to revise the error caused by the silica.

Manual Test: When "Manual test" set as "Enable", use sample in the standard liquid cup. It can also judge precision of meter measurement, or manually test concentration of samples.

Manual Calibration: Press "Enter" key at run position to start calibration according to the pre-set way, refers to 5.2.2 for details.

Initial Calibration: Press "Enter" key at run position to enter "Initial Calibration" interface, refers to 5.2.1 for details.

Zero, Slope: The following data is the latest results of auto calibration or manual calibration which can not be revised.

NOTE

- When start the background compensation function, the meter will carry out measurement and compensation automatically, end of calibration and inject the standard solution into the cup to measure, the display value is: standard value + compensation value, therefore, measured result may not the same with the initial value.
- When Start the manual test function, inject the sample into the Standard Solution Container to measure the sample. This method can manually measure concentration for a sample.

For any calibration process, it will temporarily switch to "Single Channel Display" interface, after calibration, it returns to original set picture. If the data in this menu is revised, press "Enter" key to store and return to "Main Menu".

4.2.6 Hardware test

Move the cursor to "Hardware test" and validate with "Enter" to enter the "Hardware test" submenu, showing below:

```
Hardware test                    0016 / 0600 s

Pump 1      Off
Pump 2      Off                  Metering Valve      Off
Pump 3      Off                  Mixing   Valve      Off
Pump 4      Off                  Drain    Valve      Off
Stir pump:  Off                  Calibration Valve   Off
                                 Channel1 Valve      On
                                 Channel2 Valve      Off
Measure: 4368 mV                 Channel3 Valve      Off
                                 Channel4 Valve      Off
                                 Channel5 Valve      Off
                                 Channel6 Valve      Off
```

The Hardware test submenu is an useful method in maintenance, open or close the valve manually, if no outlet when close, it indicates that the valve is working well, it also can be used to detect the state of the pump.

- Select among the hardware by direction keys, press “+”, “-“ keys to change the “On”, “Off” state on the right side of the hardware so as to know the running state. When the reagent valve is open, it will display pump switch times.
- Voltage value on the right side of Measure is output signal value for photoelectric detection circuit, it can’t be changed manually.
- If change hardware state, the measure will stop and restart till return to the main menu. The change of hardware state is only valid in corresponding menu.

4.2.7 Parameter Setup

In the main menu, move the cursor to “Parameter Setup” and validate with “Enter” to enter “Parameter Setup” submenu, as the following figure:

```
Parameter Setup

    Zero Modification:        0.0
    Slope Modification:      1.00
    Password:               0000

    Time Setup:

    2008 / 06 / 02      11: 24
```

Among which:

Zero Modification: When there is deviation in measured value and actual value, amendment quantity will add on measured value, range: (-100~+100), step: 1.

Slope Modification: Multiply amendment quantity with measured value, range: (0.80~1.20), step: 0.01.

Password: User can modify the password.

Time Setup: Set the date and time of the instrument.

When zero modification or slope modification, there may be change in display and output. For example, after calibration, 40.0ug/L standard solution measured value is 40.0ug/L, if Zero Modification is -2, Slope Modification is 1.00 (default slope), then the display value is 38.0ug/ L; if Slope Modification is 0.9, Zero Modification is 0.0 (default zero), then the display value is 36.0ug / L.

NOTE

- Be careful to carry out parameter setup, improper adjustment will bring large deviation.
- Zero Modification, moves the curve horizontally; Slope Modification, change the elevation of the curve.

Press “Enter” to store the changed data, and return to the “Main Menu”.

4.2.8 History Curve

In the main menu, move the cursor to “History Curve” and validate with “Enter” key to enter the History Curve submenu, or press the “Enter” key under the running interface, showing below:

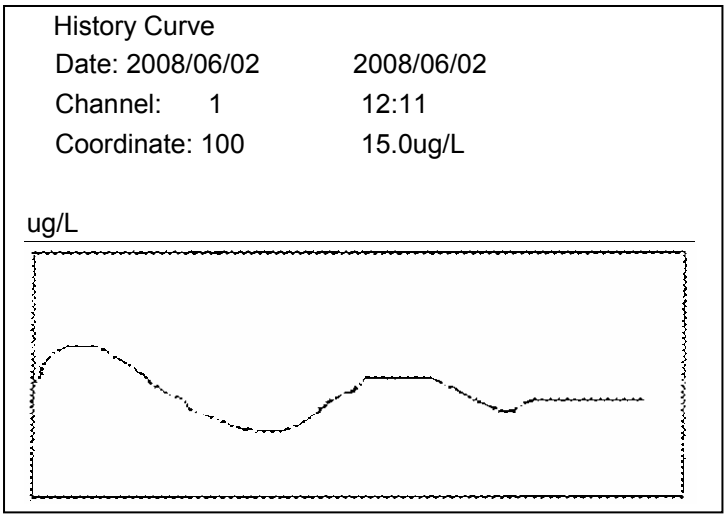

- Display the current data when entering the interface.
- Review the data by using the Direction Keys. The Up/Down keys to page up and page down, the right/left keys to move to adjacent items.
- Three items can be manually modified: date, channel and coordinate limit.

  Date: input year, month and day to carry out quick inquiry.

  Channel: 6 channels at most, input corresponding channel number to inquire data.

  Coordinate limit: display maximum concentration of curve concentration coordinate.

  Setup method: press “Enter”, the cursor will leap to year, set the corresponding parameter in accordance with <+>, <-> and direction keys, and press “enter” to display after setup.

4.2.9 History Event

In the Main Menu, move the cursor to “History Event” and validate with “Enter” key to enter “History Event” submenu, or press “Esc” under the running interface, showing below:

History Event

2008/02/03 08:06	CH2 High Alarm limit
2008/02/03 09:13	Output Test
2008/02/03 16:03	Initial Calibration
2008/02/03 10:52	CH2 Out-of-sample Alarm
2008/02/03 03:12	CH2 High Alarm limit
2008/02/03 21:32	CH3 High Alarm limit
2008/02/03 02:45	Auto Calibration
2008/02/03 11:39	Power Off
2008/02/03 13:51	Power On
2008/02/03 15:12	Manual Cal.
2008/02/03 23:46	Zero Modification
2008/02/03 08:00	Password Modification

History Event menu is used to record some important operation or modification for later inquiry.

- Display the latest events when entering the menu. Use the UP/DOWN keys to view data.
- The left side displays the date and time when the event happens, and the right side displays the content of the events.
- Event includes: power on, power off, automatic calibration, manual calibration, initial calibration, output test, hardware test, change sample inlet order, change the password, (channel※) begin high alarm, (channel※)end of high alarm, (channel※) begin liquid alarm, (channel※) end of liquid alarm, change high alarm limit(channel※), change (channel※), change liquid alarm (channel※), change output type, change the channel time, change output full-scale, change output zero, (channel※) close, (channel※) run.

Press “Esc” to return to running interface.

5. PUT INTO RUNNING

5.1 Startup

NOTE

Do not apply power to the meter until all the electric connections are verified and secure. The programming section of this book must be read carefully.

WARNING

Do not power on the meter until ensuring the sample is clean, especially there maybe some residue left in flow system for the first time use. Wash completely before infusing sample so as to avoid trapping.

Apply power to the meter and the screen will display.

Program and set parameters based on your requirements.

This work may take you several hours when you adjust for the first time or after long-term out of use.

1. Using needle valve to adjust the sample flow rate between (100~300)ml/min to get well-distributed sample without air bubbles.
2. For multi channel meter, each sample should do the same thing as above.
3. In the Main Menu, enter the ”Hardware Test” submenu and switch on the reagent pumps, pump the reagent till it can infuse to the Mixing Cup.
4. Run the instrument for 4 hours, if possible, let the instrument run over night.

Suggestion

When the reagent tube is empty, it’s difficult to pump the reagent in by using reagent pump, so we suggest, put the bottle of the reagent higher than the pump, then open the pump until the reagent fully infuse to the Mixing Cup.

Caution

Be sure that there is no bubbles inside the reagent tube, the reagent and sample should flow normally inside the tube and all the solenoid valves work in normal condition.

5.2 Calibration

Note

When solution doesn't flow smoothly, inject some calibration solution into the standard solution container and recalibrate.

5.2.1 Initial Calibration

Set a corresponding absorbency curve coordinate system for silica content so as to measure precisely. Actually, the curve is a fold line consisted of several line segments of different slopes, both end of the fold lines are two radial. The inflexion of the fold line is determined by the standard solution that provided by the user, this process is finished by initial calibration.

It's only necessary to do initial calibration when the instrument is for first time use or after long-term out-of-use. For new installed or long time out-of-use instrument, it needs several hours to initial stabilization. We suggest before initial calibration or putting into use, run the instrument for over night. For this, the samples and reagents should be connected into the system.

Steps:

1. Rinse the flow system with desalted water before zero calibration.
2. Enter the main menu and move the cursor to "Calibration", press the ENTER key to enter the calibration submenu.
3. Press "Down" to move the cursor to "Manual Test", and press "+" to change "Enable" to "Disable". Return to measure interface, "Manual Test" typeface appears on the left side of the screen. Under manual test state, inject 100mL desalted water into the standard solution container and the system will run automatically. Finally draining out the desalted water and rinse finished.
4. Enter the calibration menu again, press "Up" and move the cursor to "Initial Calibration" and validate with ENTER, as shown in the follow figure:

```
Initial Calibration

Standard Conc.    0000          Start

Calibration data:
Blank :              -.07 μg / L        4468
Initial zero:          0 μg / L         4460
Initial grade 1:      10 μg / L         4347
Initial grade 2:      10 μg / L         3912
```

5. Move the cursor to "Start", inject 100mL desalted water into the standard solution container, press "Enter" to start initial zero calibration.
6. When zero calibration, the meter will return to measure interface, "Initial Zero…" appears on the left top

7. side of the screen.
8. It will take 180s for initial zero calibration, return to calibration menu after calibration.
9. Move the cursor to value of “standard concentration”, open the channel valve, drain out the desalted water and then close the valve.
10. Inject 250mL standard solution into standard solution container, press “down” to open the valve and drain out standard solution, then press “down” to close the valve.
11. Press “+” to input standard solution concentration.
12. Inject 250mL standard solution into standard solution container, press “right” to move the cursor to “start” , and validate with “Enter” to start calibration.
13. When STD 1 calibration, the meter will return to measure interface, “initial grade1…” appears on the left side of the screen. Repeat step8~11 if required, carry out other calibration.
14. End of initial calibration, press “down” to drain out residue in the standard solution container, and rinse it with desalted water. Press “Esc” to save the results and return to measurement interface.
15. Enter to calibration menu, move the cursor to “Manual Test” and change the “Enable” to “Disable”.

Note

Step 8, 11 is used to wash the flow way with new standard solution, to avoid calibration being influenced by residue in last calibration, you can also rinse the standard solution cup manually.

End of initial calibration 1, then you can quit calibration process or carry out other calibration. Grade 2 , grade 3 , and grade 4 are optional, measure range should be (0~100)μg/L. Calibration 1 is needed.

5.2.2 Manual calibration

When reagent changes, meter maintenance or there is deviation in measured value, manual calibration is required. It includes ”zero calibration“ and ”slope calibration”. Desalted water used in zero calibration and standard solution used in slope calibration. Process as follows:

1. Rinse the flow way system, inject 100mL solution into the standard solution container, open “Calibration Valve” in “Hardware Test” menu, drain out solution in standard solution container (step 2, 3 in initial calibration can be used, “Manual Test” must be set as “Disable” after calibration).
2. Inject 250mL solution into the standard solution container.

3. Select calibration mode: enter “Calibration” menu and move the cursor to “Calibration Mode”, use “+” to change calibration mode.
4. Set standard solution concentration: move the cursor to “Standard Solution”, and press “+”, “-“ to change standard solution concentration.
5. Press “Down”, move the cursor to “Manual Calibration”, then press “Enter” to carry out calibration.

5.2.3 Automatic Calibration

After the instrument is initial calibrated, the automatic calibration can be used if necessary. The only thing the user should do is to set parameters in the calibration menu according to your requirement. The automatic calibration includes “zero calibration” and ”slope calibration”. The desalted water used in zero calibration and the standard solution used in slope calibration. Process as follows:

1. Rinse the standard solution container and inject 100mL standard solution into it. Open “Calibration Valve” in “Hardware Test” menu, drain out the solution from the cup, then fill it with calibration solution.
2. Enter “Calibration” menu, move the cursor to the value of concentration, and press “+”, “-“ to input standard solution concentration.
3. Move the cursor to “Calibration Mode”, press “+” to change calibration mode.
4. Move the cursor to “Calibration Interval”, press “+” “-“to input automatic calibration interval, setup range is (1~255) hour.

   After setup, press “Enter” to return.

WARNING

Capacity of standard solution cup is limited, if set as automatic calibration, observe the standard solution at any time, replenish in time when solution is used up, to avoid great error in measured value.

5.3 Background compensation

Background means silica content in demineralized water.

For HK-118W silica analyzer, we can calculate background silica content by calibration data and accumulate automatically, set “Background Compensation” as “On” when needed, otherwise “Off”.

NOTE

Background compensation is calculated by calibration data, wrong calibration may influence the calibration results.

5.4 System disable

5.4.1 Temporary stop working

The mater can be left with the pump switch off for hours without any precaution, the only thing you should do is to turn off the power.

5.4.2 Long-term stop working

If the instrument has to stop working for several days or several weeks, some protective measurements should be taken to make sure the instrument will be re-started without any trouble.

1. Put reagent tubes into de-ionized water, under “Hardware Test” menu, pump de-ionized water and drain out reagents to ensure the cleanness of reagent tubes.
2. To avoid the reagent creating boundary layer on the wall of pipes when flowing through, the mixing cup and colorimeter cell should be rinsed with de-ionized water.
3. After rinsing, switch off the power.

After a period of time, when you restart the instrument, it needs to prerun for several hours, and better to do initial calibration again.

5.5 Meter maintenance

Regular maintenance can ensure normal working and correct analysis.

- Per 30 days

  Check the liquid level of the reagent container, replenish in time when the solution is used up, carry out manual calibration after change new reagent.
- Replenish solution according to the interval of automatic calibration.

6. SPECIFICATIONS

Measurement Range: (0~200) ug/L or (0~2000) ug/L(Optional).

Measurement interval: 10 minutes

Display Error: ±2%F.S

Repeatability: ≤1%

Stability: Base line drift: Blank Calibration.

Chemical drift: ±1% F.S / 24h (depend on the stability of reagent)

Sample conditions: Flow: (150~300) ml/min

Temperature: (5~50)℃

Solid content permitted: ≤5μm (no gel)

Ambient Temperature: (5~45)℃

Relative Humidity: ≤90%RH(no condensing)

Reagent Consumption: ≤3 L/30 days/ one kind(4 kinds of reagent)

Display: 320×240 lattice LCD display in English and Chinese

Isolated output:(0~10) mA, (0~20) mA, (4~20) mA

Power supply: (220±22)VAC Frequency: (50±1)Hz

Power: ≤150W

Dimension: (690×450×215)mm (H × L× D)

Cutout Dimension: (645×410) mm

Weight: 22kg

Alarm: Out-of-sample, High-limit Alarm

Appendix 1: Tree Diagram of Meter

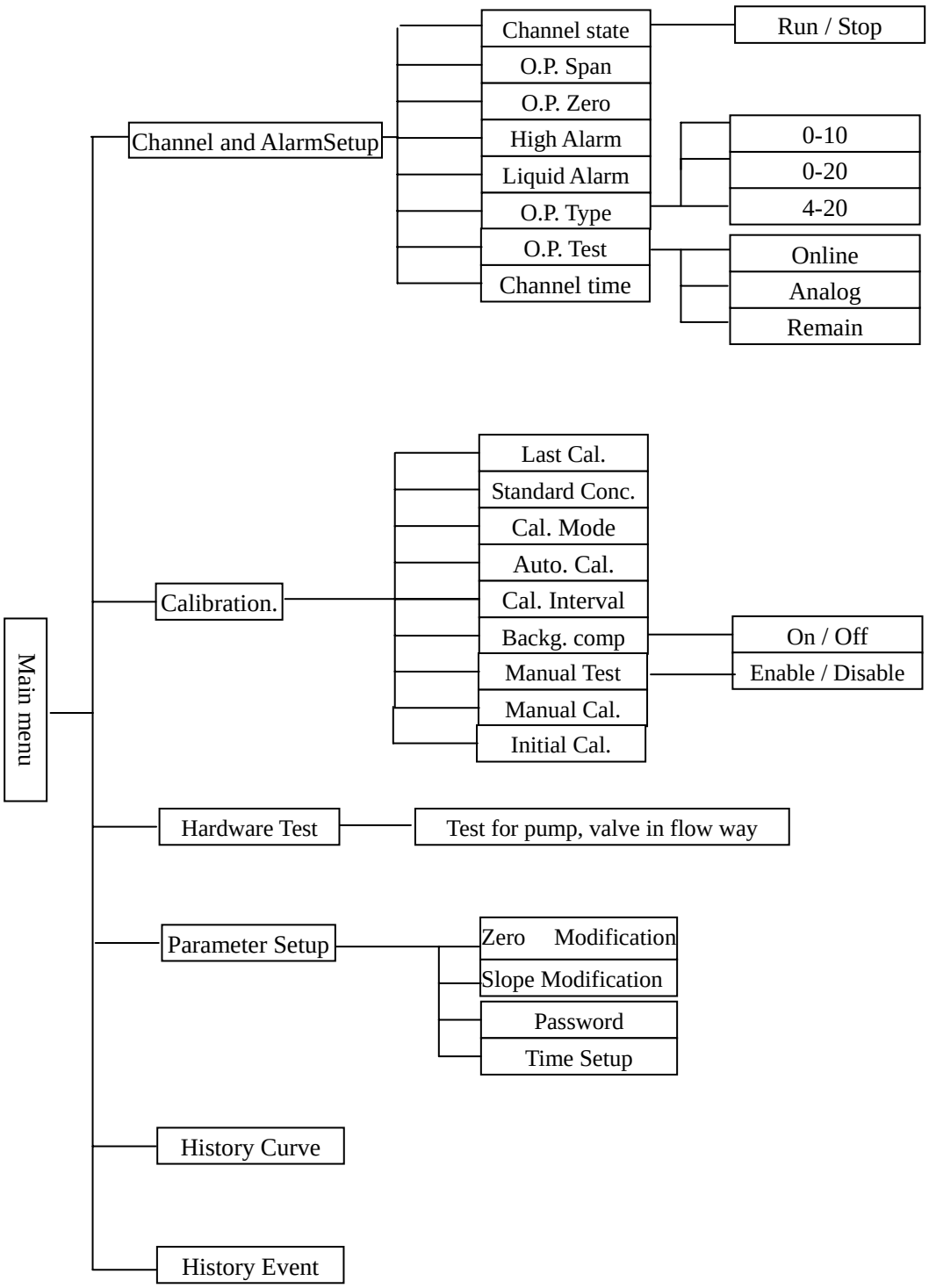

Appendix 2: Working Point Adjustment Of Silica Analyzer

Photometer is different from other accessories, adjust the working point o hanging the transmit unit or receive unit, calibration process is shown below:

1. Refer to “fig. 2 front view”, detach the main board front cap and photometer cap, replace the transmit unit (on the left side of the color meter) or receive unit (on the right side of the color meter).

2. Inject 100 mL desalted water into the cup, operate the analyzer and enter to “Hardware Test” menu, close all the valves except for calibration valve and mixing valve, fill the color meter with desalted water.

Hardware Test		0016 / 0600 s	
		Metering Valve	Off
Pump 1	Off	Mixing Valve	Off
Pump 2	Off	Drain Valve	Off
Pump 3	Off	Calibration Valve	Off
Pump 4	Off	Channel1 Valve	On
Stir pump:	On	Channel2 Valve	Off
		Channel3 Valve	Off
		Channel4 Valve	Off
Measure: 4368 mV		Channel5 Valve	Off
		Channel6 Valve	Off

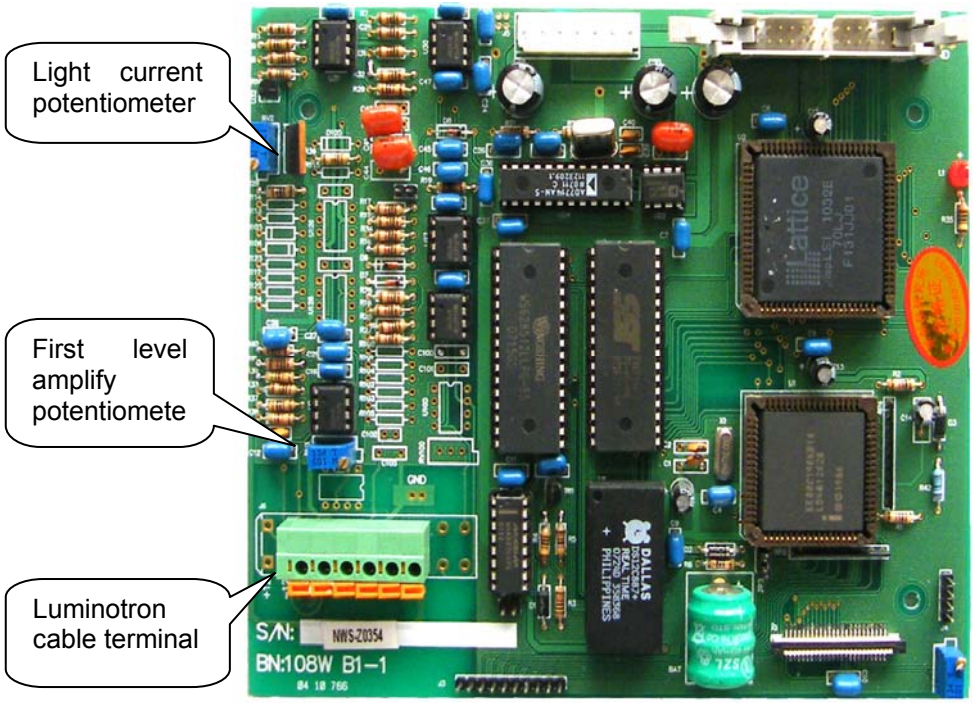

3. Detach LED connector which located on the main board(5th or 6th hole of luminotron cable terminal), connect with multi-meter current, adjust “lamp current potentiometer”,and set lamp current as (28-34) mA, reconnect the line cable.

4. Adjust “first level amplify potentiometer”, observe voltage value displays on the screen, set the voltage as 4400mV.

Appendix3: Accessory list

Name	Order No.	Description
118W main board	04.03.13	108WB1-1-S
118W power board (1~6channel)	04.03.64	108WB2-1-S
LCD display	01.01.07.02	320×240
118W panels and membrane button	01.08.01.03.02	118W-MJ (without the LCD)
Colorimeter cell	01.03.06.11	B50-1 (general)
Colorimeter cell	01.03.06.03	B25-1 (higher range)
118W photometer component	04.03.24	ZB100-820 (regular range , suit with B50-1)
118W photometer component	04.03.25	ZB2K-820 (higher range, suit with B25-1)
118W photometer transmit unit	04.03.46	Z820B
118W photometer receiving unit	04.03.47	Z111B
(Silica)Reagent tube	04.03.19	TYGON 1.6-4 (4 pieces)
Drain tube	04.12.01.33	190-BO-??-01
PMP(polymethyl methacrylate plastics) filter	04.03.28	GLQ55 (include LX40 filter core)
Filter core(screw thread)	04.03.51	LX40 (suit with GLQ55)
Φ6 plastic T-piece	01.04.09.14	
Branching cup components	04.03.30	FLSJ60 (contain the tie-in)
Standard solution container components	04.03.32	100BYCUP (contain the hand valve and solenoid valve)
Meter-Mixing cup	01.13.01.55	Without solenoid valve
1056 pump components	04.12.01.36	DC-220V
Liquid Level Sensor	01.05.09.01	
Two-way solenoid valve	01.04.02.26	6126 A
Drain out solenoid valve	04.01.19	FFY 22 (contain joint)
Needle valve	01.13.01.07	100val
HAILEA stir pump	04.03.43	AC 24V
Stir pump adjust valve	01.04.08.05	SV-02
Standard solution (60m L)	04.06.04	S-10 (10μ g / m L)

Product and client support

Laboratory Instruments

PHS-3C Table –type pH Analyzer
HK-3C Table-type precise pH Analyzer
DDS-307 Table-type Conductivity Analyzer
HK-307 Table-type Conductivity Analyzer
DWS-51 Table-type Sodium Analyzer
HK-51 Table-type Sodium Analyzer
HK-208 Phosphate Analyzer
HK-218 Silica Analyzer
HK-228 Hydrazine Analyzer
HK-258 Portable Dissolved Oxygen Analyzer
HK-268 Acid/Alkali Concentration Analyzer
HK-508 Iron Analyzer
HK-518 Copper Analyzer

On-line Instruments

HK-108C Phosphate Analyzer
HK-108W Phosphate Analyzer
HK-118C Silica Analyzer
HK-118W Silica Analyzer
HK-128W Hydrazine Analyzer
HK-318 Dissolved Oxygen Analyzer
HK-328 pH Analyzer
HK-338 Conductivity Analyzer
HK-358 Sodium Analyzer (Cation Exchanger)
HK-358 Sodium Analyzer (Steam)
HK-368 Acid/Alkali Concentration Analyzer
HK-600 Channel Distributor
HK-7000 Combustible Gas Alarm Control
HK-7100A Combustible Gas Alarm Detector
HK-7200A Toxic Gas Alarm Detector

Technical Support

Beijing Huakeyi Power Research Institute
Nancun Industrial Field, Qiliqu, Shahezhen, Changping District, Beijing, P.R. China
Tel: 86-10-80705660
Fax: 86-10-80705682
Email: hky@huakeyi.com
http://www.hky.com.cn
http://www.huakeyi.com

Essential Instruction!

1. **Read all instruction manual prior to installing, operating and servicing the product.**
2. **The Analyzer should be stored in an area where is clean and dry.**
3. **Regularly check the status of analyzer.**
4. **If Analyzer is failed during warranty, please submit the followings:**
   a. Alarm logger on failure;
   b. Operation records;
   c. Maintenance records.