HK-108W Phosphate Analyzer

Instruction Manual

Version: 2.3

www.huakeyi.com

Beijing Huakeyi Power Plant Instrument Research Institute

PREFACE

The Analyzer

Model HK-108W is a maintenance-free online instrument used for continuously monitoring phosphate in industrial process. The quality, accuracy and performance of the analyzer results from over ten years on-site experience of the company, combined with a continuous program of innovative design and development to incorporate the latest technology.

The Manual

The Instruction Manual provides information about Model HK-108W Phosphate Analyzer. It is compiled for users to familiarize the structure of the instrument, principle of operation and operation procedures. The potentially fallible and easy-to-ignore problems during operation are detailed for preventing unnecessary troubles and failures for long-term safe and reliable operation.

The Company

We are specialized in designing and manufacturing of instrumentation for water analysis and combustible/toxic gas detection. Our products have been applied in power plant, chemical, petrochemical, pharmaceutical, metallurgy, scientific research and other related fields. Huakeyi works to meet the customers' needs through our commitment of continuous innovation and development to providing better products and services.

Beijing Huakeyi Power Plant Instrument Research Institute

August 1, 2008

CONTENT

1. INTRODUCTION

1.1 Overview

The analyzer is housed in a metal enclosure with a transparent front door through which the structure of the instrument and the working state can be observed clearly, without opening the door. The instrument consists of the electric system and the flow system. The electric system is located in the up-right of the case. The rest parts are the flow system.

Fig.1. External view of the instrument

1.2 Chemical Principle

When the molybdate and the meta-vanadate are added using the pump and mixed with the sample in the mixing cup, they will react with the orthophosphate in the sample to form a yellow-colored phospho-vanado-molybdate compound in an acid medium with the acidity of 0.6N, the quantities of the reagents and the reaction time is controlled by the program precisely, and the mixing pump make the chemical reaction more thoroughly. The colored solution then flow into the photometer for measurement.

The phospho-vanado-molybdate has the maximum absorption at the wavelength of 420nm. The optical system utilize a double-light-beam with the 420nm monochromatic light, one beam for measurement and the other one for reference, the lights through the photometric cells then get into the detectors separately, the output signals from the detectors then transferred to electric system.

1.3 Flow System

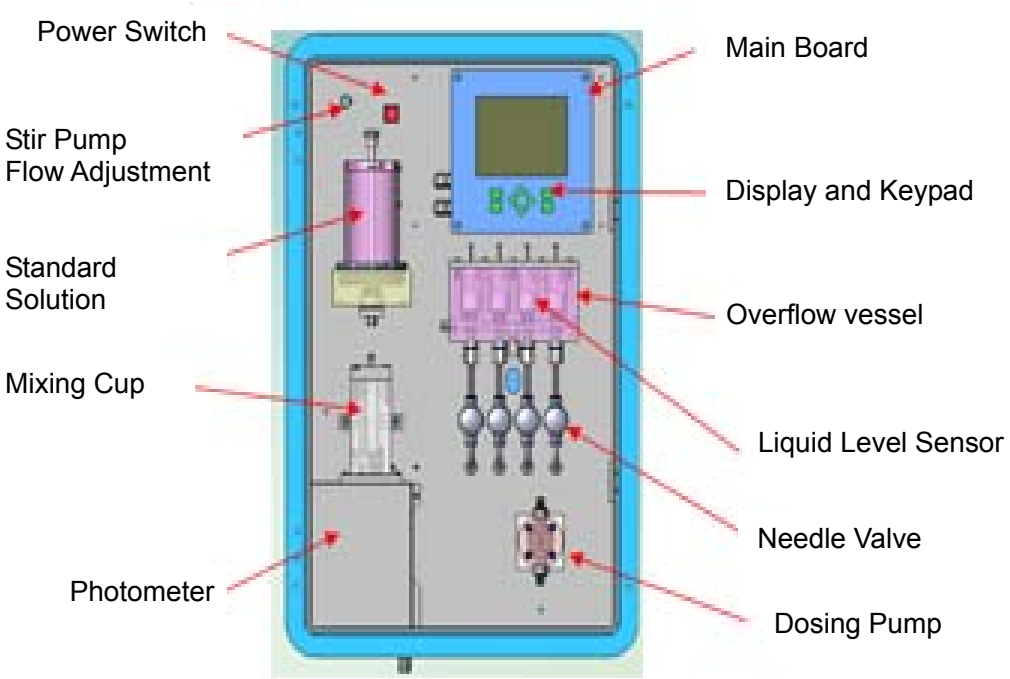

Fig.2 Front view

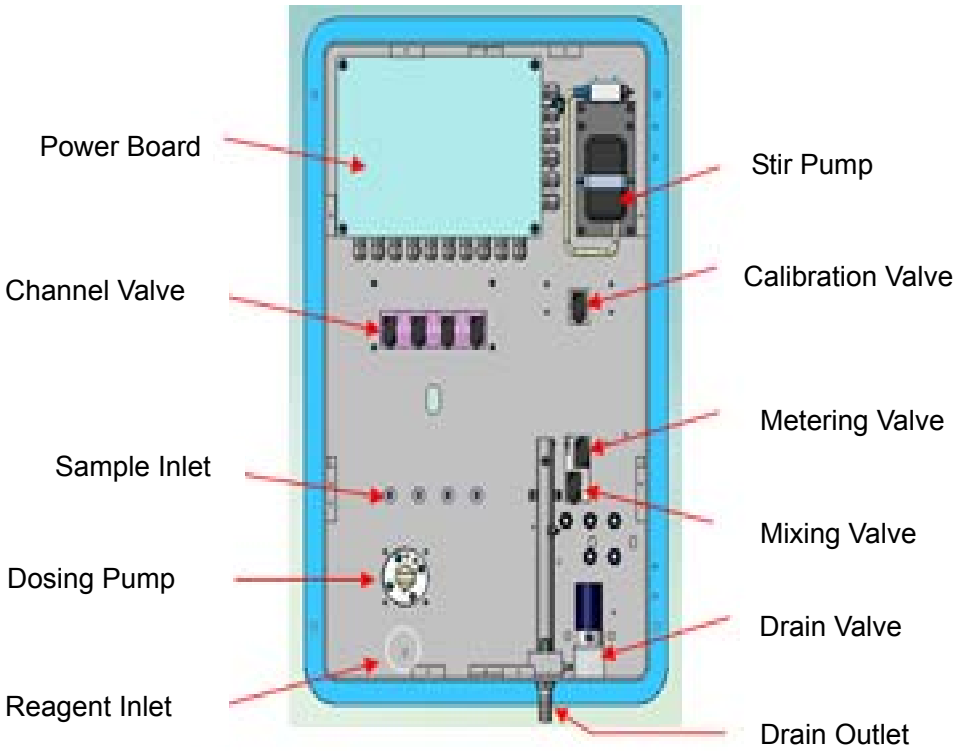

Fig.3 Back view

1.3.1 Functions of the components

- **Power Switch:** turn on/off the instrument.
- **Stir Pump Flow Adjustment:** adjust the air output of the Stir Pump. Better to see continuous bubbles and no boiling in the mixing cup.
- **Standard Solution Container:** contain the calibration solution.
- **Mixing Cup:** where the sample and reagents get mixed and the chemical reactions take place, and then get the colored solution. The volume of the sample and reagents are precisely metered.
- **Photometer:** convert the phosphate concentration signal into electric signal.
- **Main Board:** main component of the electric system (inside the case), mainly used in displaying, calculating and controlling. See 1.4.1 for details.
- **Display and Keypad:** display data and working state, the keypad used for debugging and operation. See 1.4.3 for details.
- **Overflow vessel:** provide a stable sample pressure and out-of-sample detecting. Each water stream should have a corresponding overflow component, the instrument can have 6 streams at most, which are, from left to right, channel 1 to channel 6 when observe the instrument from the front.
- **Liquid Level Sensor:** part of the overflow system, used for detecting if there is water in the corresponding channel.
- **Needle Valve:** adjust the flow rate and pressure of the inlet sample.
- **Dosing Pump:** pump the reagents precisely for reaction.
- **Power Board:** main component of electric system (inside the case), mainly used in providing voltage, driving the corresponding pumps and valves. See 1.4.2 for details.
- **Channel Valve:** choose the water stream in multi-stream application, it is channel valve 6 to channel valve 1 from left to right when observe the instrument from the back, which are corresponding to the channels.
- **Sample Inlet:** from where the sample water flows into the pipeline of the instrument. See 2.3.1 for details.
- **Reagent Inlet:** from where the reagents get into the analyzer. See 2.3.2 for details. Preparations of the reagents see 3.2.1.
- **Stir Pump:** Mix the solution in the mixing cup thoroughly.
- **Calibration Valve:** let the calibration solution in the standard solution container flow into the mixing cup while calibrating or manual testing.
- **Metering Valve:** meter volume of the solution in the mixing cup.
- **Mixing Valve:** let the solution in the mixing cup flow into the photometer.
- **Drain Valve:** drain out the liquid in the photometer.
- **Drain Outlet:** drain out the measured solution and overflowed sample into the trench.

1.3.2 Working procedure

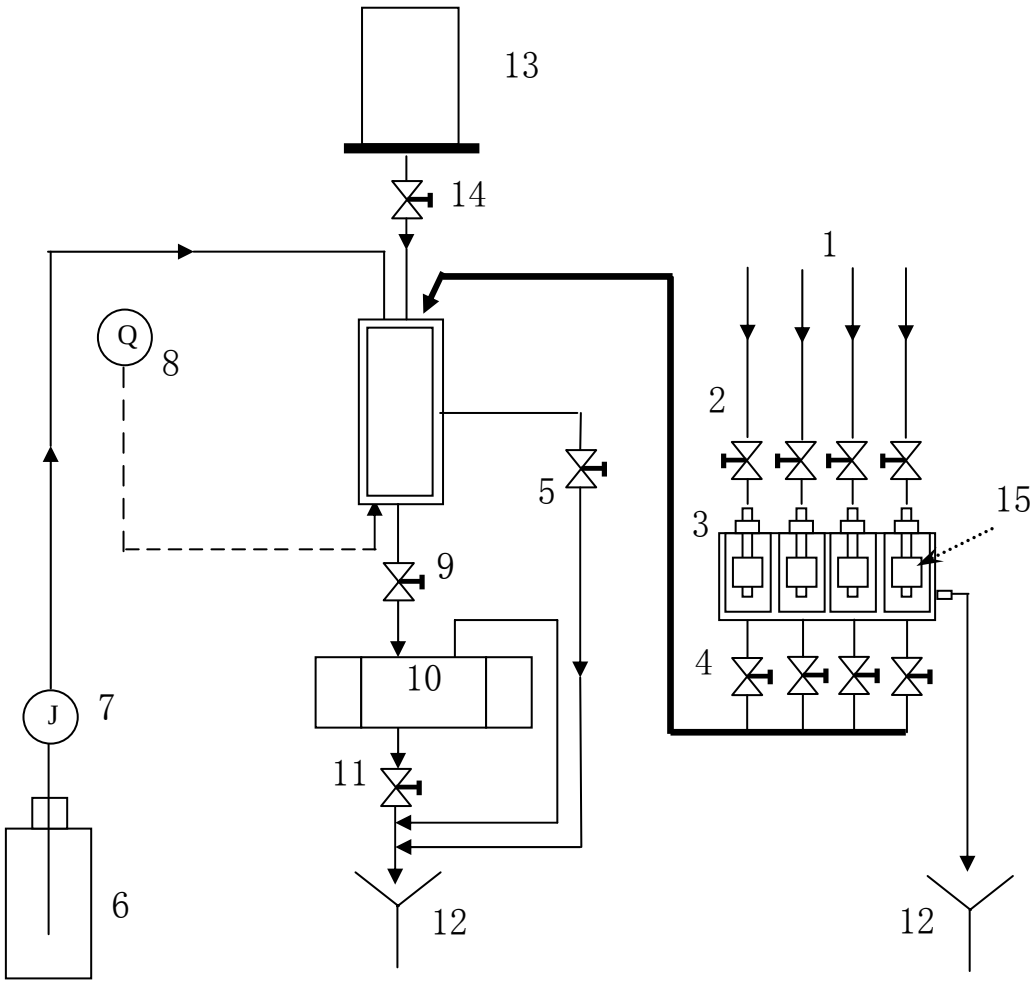

Fig.4 Working procedure

1. Sample water
2. Needle valve
3. Overflow vessel
4. Channel valve
5. Metering valve
6. Reagent
7. Dosing pump
8. Stirring pump
9. Mixing valve
10. Photometer
11. Drain valve
12. Drain out
13. Standard solution container
14. Calibration valve
15. Liquid level sensor

The pretreated sample comes into the overflow vessel through the needle valve and flow circularly to ensure continuous typical sample. The sample out of the overflow vessel will flow into the mixing cup at a constant pressure and flow rate.

Before metering volume of the sample, it is used for rinsing the mixing cup and the colorimetric cell. When start metering volume, the metering valve opens and part of the sample drain out, a fixed volume of sample left. Then the sample react with the reagents pumped through the dosing pump, the quantities of the reagents added are precisely metered to ensure the accuracy of measurements. After the colored solution flow to the photometer and get measured, the solution will drain out through the drain valve.

The signal from the photometer will transfer to the electric system. After processing, the output signal get A/D converted by the main board and then sent to CPU and display on the 320 x240 back-light LCD. Meanwhile, the power board provides isolated current output for the remote recorder / indicator or the data processor.

Each water stream has a sample level sensor in the overflow vessel, when it is out of sample, the sensor will find out immediately and display a warning signal on the LCD screen. In the meantime, the power board provides a relay contactor of out-of-sample alarm for the remote recorder / indicator or the data processor.

1.4 Electric System

The electric system includes the main board, power board, display unit, signal line and the photo-electrical converter. The SCM system controls dosing of the channel valves, calibration valve, metering valve, mixing valve, drain valve, Stir Pump and dosing pump. Also, sample state detection, analog data acquisition, (4-20)mA isolated output of channel 1 to channel 6, limit-exceed alarm and out-of-sample alarm are finished by the electric system. At the back of electric box, there are power supply terminals, relay output terminals, (4-20)mA current outputs of 6 channels, limit-exceed alarm outputs of 6 channels and out-of-sample alarm outputs of 6 channels.

The main function of the electric system is to control the flow system to accomplish the set measurement task; to process the signals sent from the flow system and display them on the screen; to provide proper outputs--current outputs and relay contactors; to save the measurement results for future retrieval; to set program parameters by operator and to provide necessary information for the operator to judge the instrument's working state.

Fig.5 Block diagram of the system

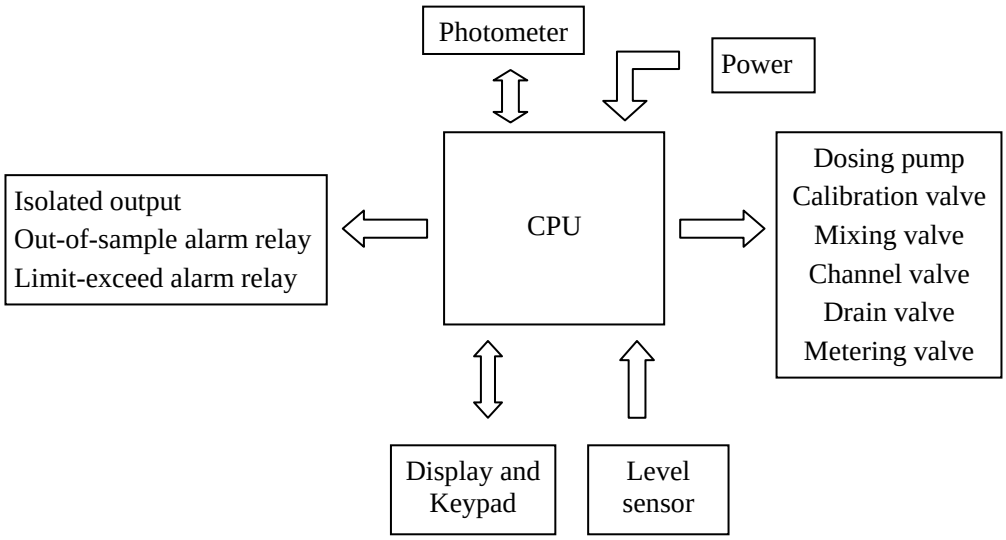

1.4.1 Main board

Most job of the instrument are accomplished by the main board, such as pre-amplifying, A/D converting, data processing, flow system controlling and display controlling

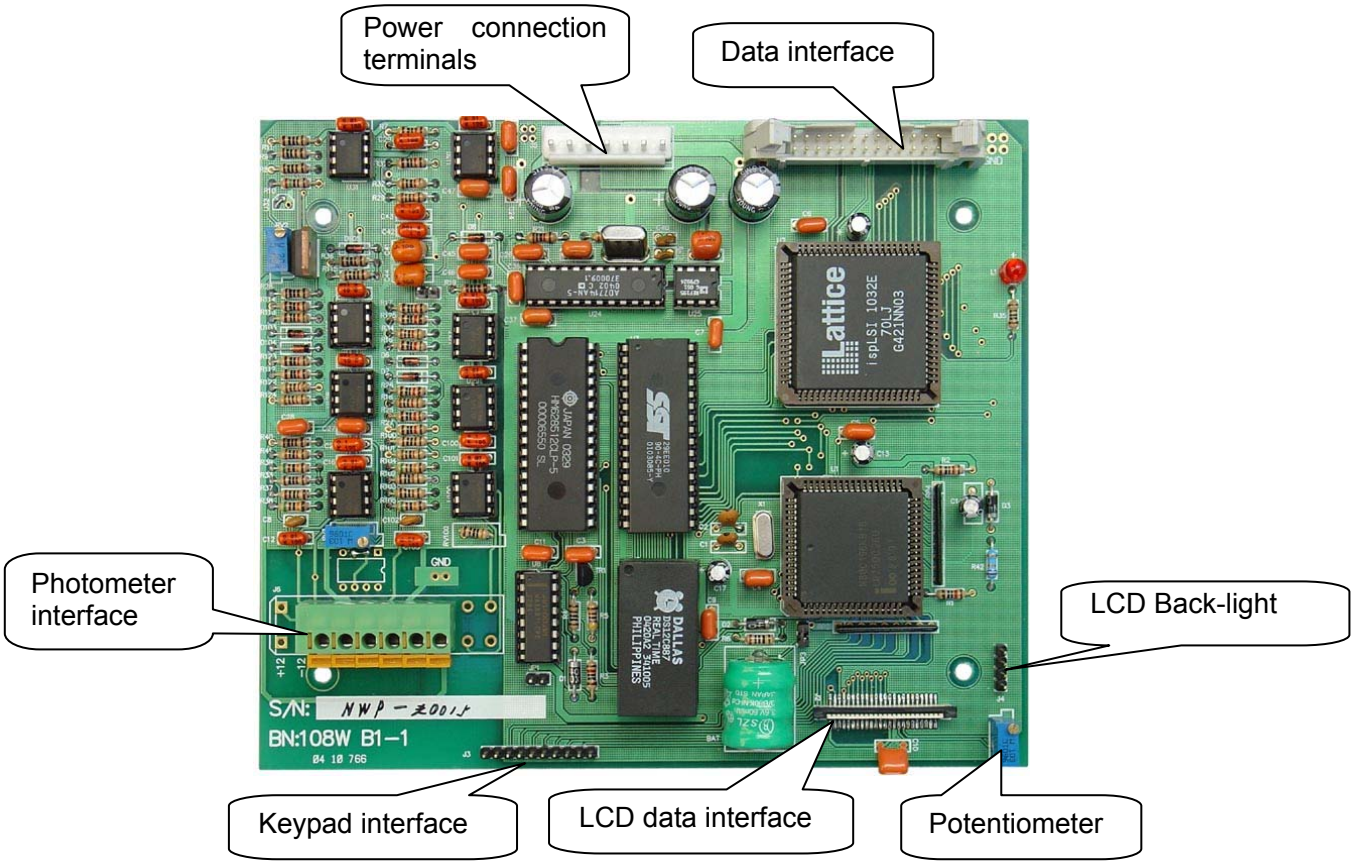

Fig.6 Main board

- Power connection terminals: connect with J5 of the power board by 7-core power cable, form left to right they are: +12V, AMFGND, -12V, GND, GND, VCC, VCC.
- Data interface: data communication between main board and power board, connect with J1 of the power board.
- Photometer interface terminal: connect with the photometer, from left to right they are READ, AMFGND (with shielding wire), REF, AMFGND, LED+, LED- and must be connected with J6-1, J6-2, J6-3, J6-4, J6-5, J6-6 respectively.
- Keypad interface: connect with the keypad.
- LCD data interface: connect with the digital wire of the LCD.
- Potentiometer: adjust the brilliance of the LCD, the upper connect with the red wire and lower with the white wire.
- LCD Back-light: connect with the backlight, the upper connect with the positive (red wire).

1.4.2 Power board

The power board provides power for the main board, LCD, solenoid valves and drives all electrical parts of the flow way, including the dosing pump, calibration valve, metering valve, mixing valve, channel valve, drain valve. The isolated output unit is also on the power board.

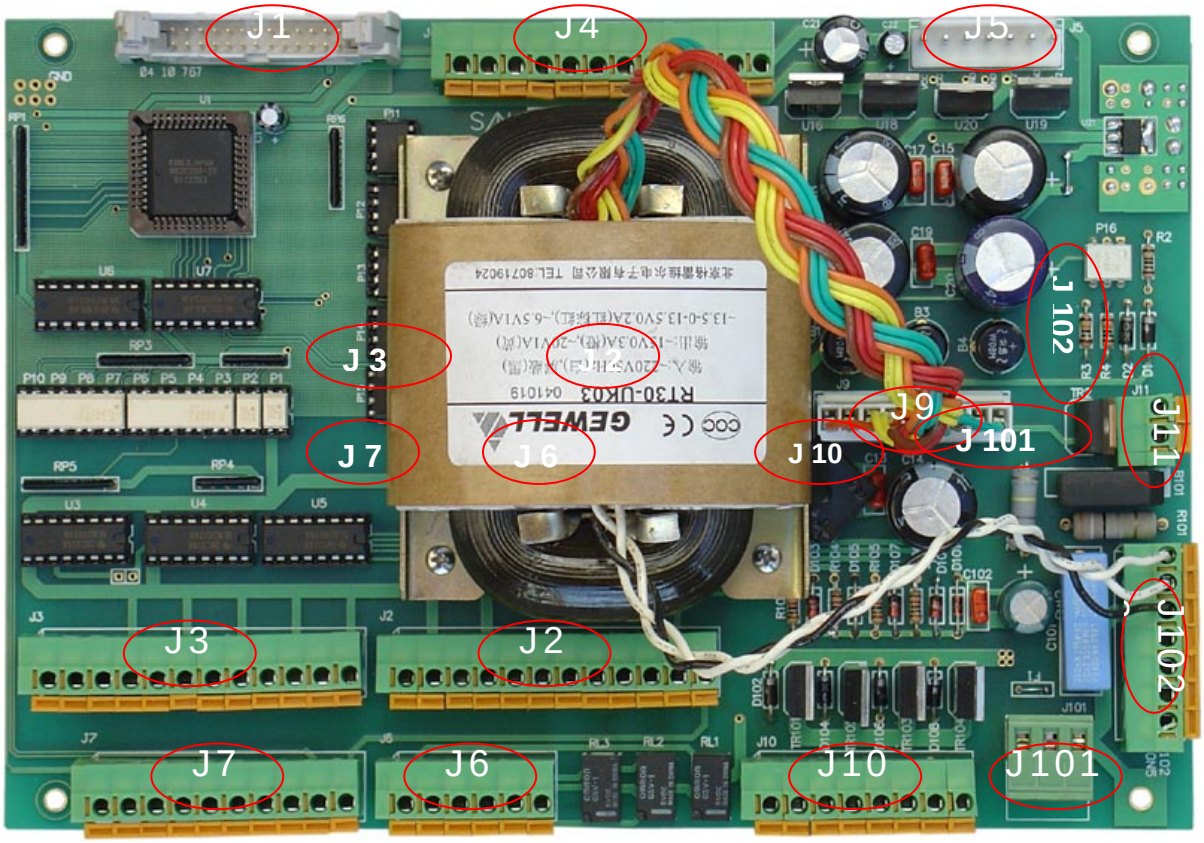

Fig.7 Power board

J1: connect with the data interface of main board. 26 pins horn socket, connect with flexible flat cable.

J2: terminals for solenoid valve and liquid level switch in single-channel application. Refer to 2.4.2.1 for details.

J3: terminals for solenoid valve in multi-channel application. Refer to 2.4.2.2 for details.

J4: terminals for isolated current output. Refer to 2.4.1.2 for details.

J5: connect with the power interface J5 of the main board by 7-core power cable, from left to right they are: VCC, VCC, GND, GND, -12, AMFGND, +12 as shown in the figure.

J6: terminals for alarm relay. Refer to 2.4.1.3 for details.

J7: terminals for multi-channel liquid level sensor. Refer to 2.4.1.2 for details.

J9: secondary interface for transformer, from left to right: 15V, 20V, 13.5-0-13.5V, 6.5V. And the separate line colors are: orange, orange, yellow, yellow, red, red, brown, green, and green.

J10: dosing pump interface (2 lines). Refer to 2.4.2.3 for details.

J11: terminal for gas pump, also provide power to air pump.

J101: power supply terminal. Refer to 2.4.1.1 for details.

J102: power line terminal, from top to bottom are: transformer (white, white, black), power switch out (blue, red), power switch in (blue, red).

1.4.3 LCD and keypad

The 320x240 back-light lattice LCD can show full information about the instrument.

There are 8 keys on the front panel and their respective functions are:

→ Direction keys:

- Move the cursor to selected position.
- If press the Up and Down when a calibration finished, all the Calibration valve, Metering valve, Mixing valve and the Draining valve will be opened to rinse the whole flow system.

→ Modify the value of the selected parameter or choose the selectable parameter.

→

- Validate the selected function or enter to the submenu;
- In the “Single channel display” and “Multi-channel display” interfaces, the user can enter to “History Curve” menu by pressing this key.

→

- Go back to the previous Menu;
- In the “Single channel display” and “Multi-channel display” interfaces, the user can enter to “History Event” menu by pressing this key.

2. INSTALLATION

2.1 Location

Before installing the analyzer, consider the following precautions:

- Place the analyzer close to the sample point so as to reduce response time. The sample should be homogenous and representative.
- Choose a clean, well ventilated and vibration-free location.
- Ensure no corrosive gases or vapors in the room, such as chlorination equipment or chlorine cylinders.
- It is also advisable to have adjacent drains near ground sewer to make sure the waste drain out from the analyzer as short as possible, together with maximum fall.
- Enough space which is at least equal the size of one whole instrument body at the back is required and both sides must be reserved for operation and observation.
- The ambient temperature can't exceed 40℃. If the temperature is below 5℃, the analyzer should be installed in a heated cabinet.

2.2 Mounting

There are two modes to install the instrument: panel mounting and independent mounting (it should be confirmed when ordering). The location of the instrument is preferred higher than (50～90)cm from the ground, and the reagent container must be placed under the instrument at least 20cm lower than the bottom plate of the instrument.

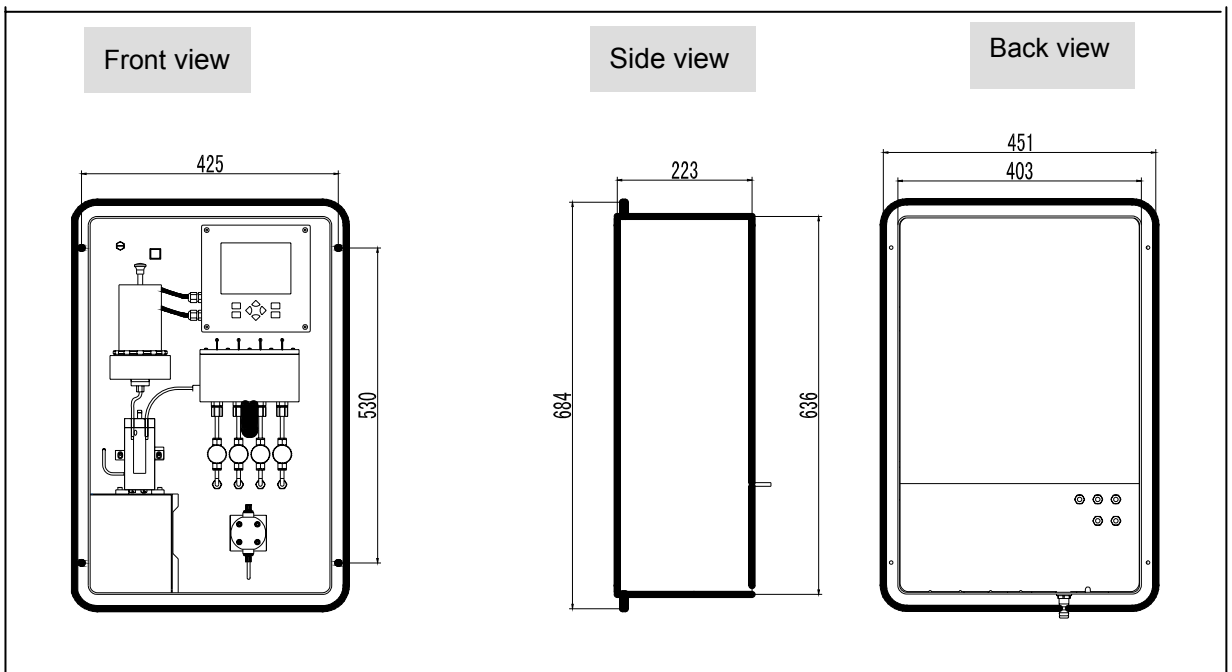

Fig.8 Installing dimension

Drill a hole of 645mm×410mm in the panel, and drill four Φ6 through-holes, and fasten the analyzer using four screws.

2.3 Pipe connection

Be careful while connecting the pipeline, any misconnection will make the analyzer unable to work.

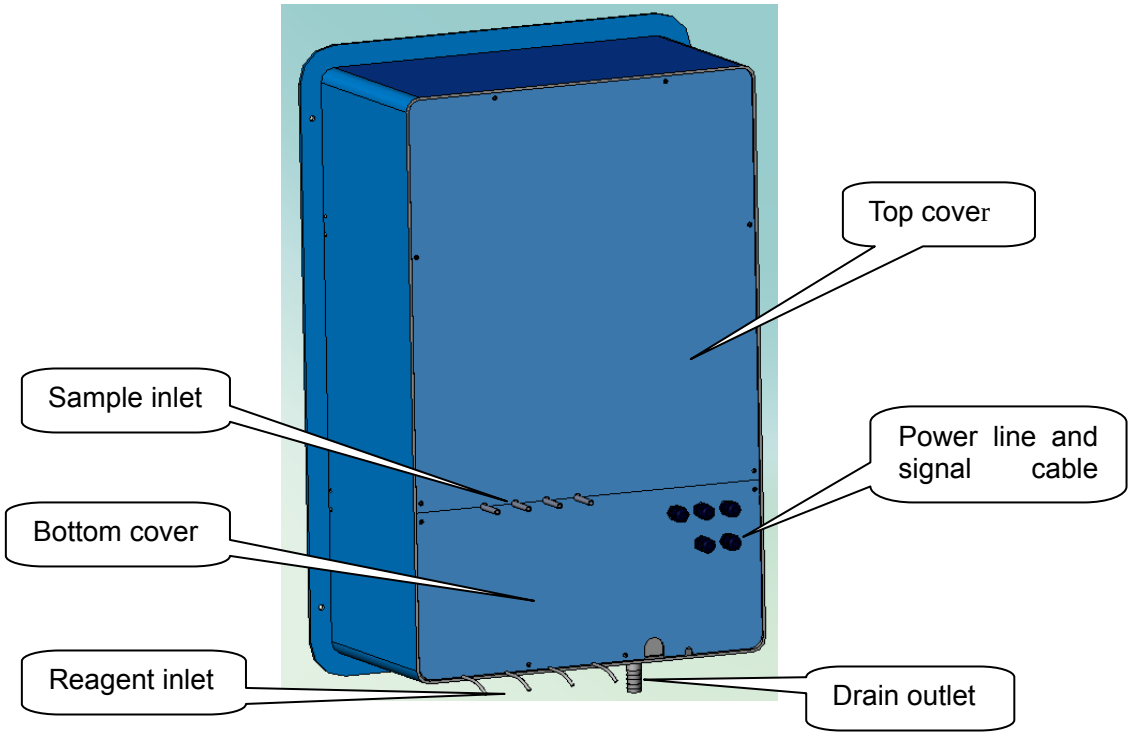

Fig 9. Pipeline connection

2.3.1 Sample Connection

Rinse the pipeline thoroughly to eliminate any possible contamination before supplying sample to the analyzer.

The sample should be homogenous and representative. Particles in the sample should not exceed 5μm and the concentration should be less than 10 mg/L. A valve on the upstream is necessary to supply water at a constant pressure.

The sample is also required to conform to the following conditions:

- Sample temperature must be within the range (5～50)℃.
- Sample flow rate should be kept constantly within the range (150～300) mL/min.
- For those high temperature and high pressure samples, their temperature and pressure should be properly reduced.
- Sample pressure should be less than 0.6MPa and keep stable.

For sample inlets, use #316 stainless steel tube with the size of (6 x 1)mm. The flow rate is adjusted by the needle valve.

While installing, use the Φ6 connector to connect the sample tube with the “sample inlet” tube. If the diameters are not matched, choose a proper connector or weld them together.

2.3.2 Reagent Connection

The reagents are pumped into the instrument by dosing pump, the tube which connects the Pump and reagent locates at the rear bottom of the instrument. The size of the reagent pump tubes delivered with the instrument matches exactly with the connector of the dosing pump.

1. Respectively connect the reagent tubes with the connectors of the dosing pump.
2. Put the other end of the reagent tube into corresponding reagent container (better to use 3L or 5L polythene container).

2.3.3 Drain liquid Connection

Drain outlet is located at the rear bottom of the analyzer and is carried out by the user with a 2m drain pipe (Φ16 plastic tube) delivered with the instrument. It should be at atmospheric pressure and not be looped.

When connections finished, check if all the connectors are tight enough, make sure there is no leakage.

2.3.4 Installation of water pre-treatment device

For some applications with poor working conditions, like large sample pressure variation, flow instability, frequent start and stop, or high impurity in the sample, these will lead to sample break or blockage in flow way, which makes the measure unable to be carried out normally. A water pre-treatment device is necessary under these conditions.

Installation of water pre-treatment device is shown in the following figure, and it consists of the storage tank, T-junction and the filter.

NOTE:

This figure shows the installation on the housing of the instrument case, if the instrument case was not ordered, the user need to find a proper place to install the water pre-treatment device.

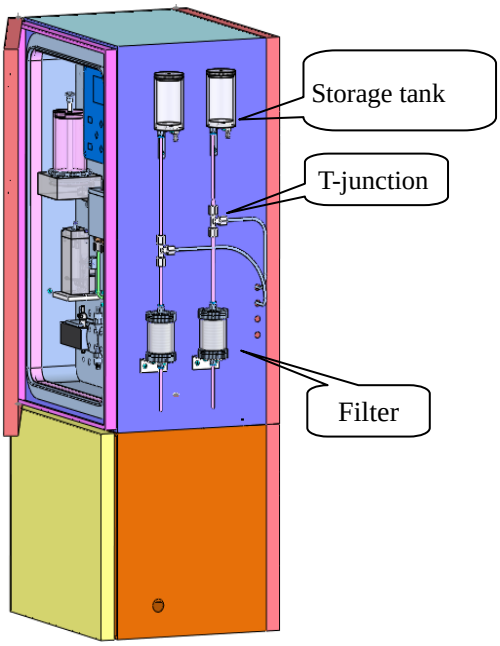

While installing the water pre-treatment device, the sample tube will not connect with the sample inlet but the bottom of the filter by a piece of nylon hard tube, first the impurities get eliminated by the filter, then the filtered sample flows to the T-junction and the sample water divided into two streams, one stream flows to the analyzer for measurement, and the other to the storage tank, so when the sample flow is large, part of the sample will flow to the tank, and when the flow is small the tank will supply the stock sample to the analyzer. In this way, the analyzer will get a stable flow rate.

The filter may get blocked by the impurities after a period of time, the user needs to remove the filter core and rinse it with clean water, and the rinse cycle will get more and more frequent, when it gets too frequent, you should consider replacing a new filter core.

2.4 Electric Connection

WARNING

- **DO NOT apply power to the analyzer until all the installations and connections are verified and secure.**
- **The connections must follow the regulations and comply with the connecting diagrams in this manual.**

2.4.1 User electric connection

User electric connection is to carry out connections after installation, including: power connection, (4~20) mA output signal wire connection, alarm signal connection etc.

The electric connection must be in accordance with **Fig 9. Pipeline connection**. Remove the top cover which is fastened with 6 cross panel screws from the rear of the analyzer, put the cable through the “Power and signal line inlet” and extend to the power board which is located on the top left side of the case (refer to **Fig.3 Rear view**), unscrew the 4 screws then you can see the circuit board.

2.4.1.1 External power connection

The power supply terminal locates at the right bottom of the power board, all the wiring should be the same with terminal polarity.

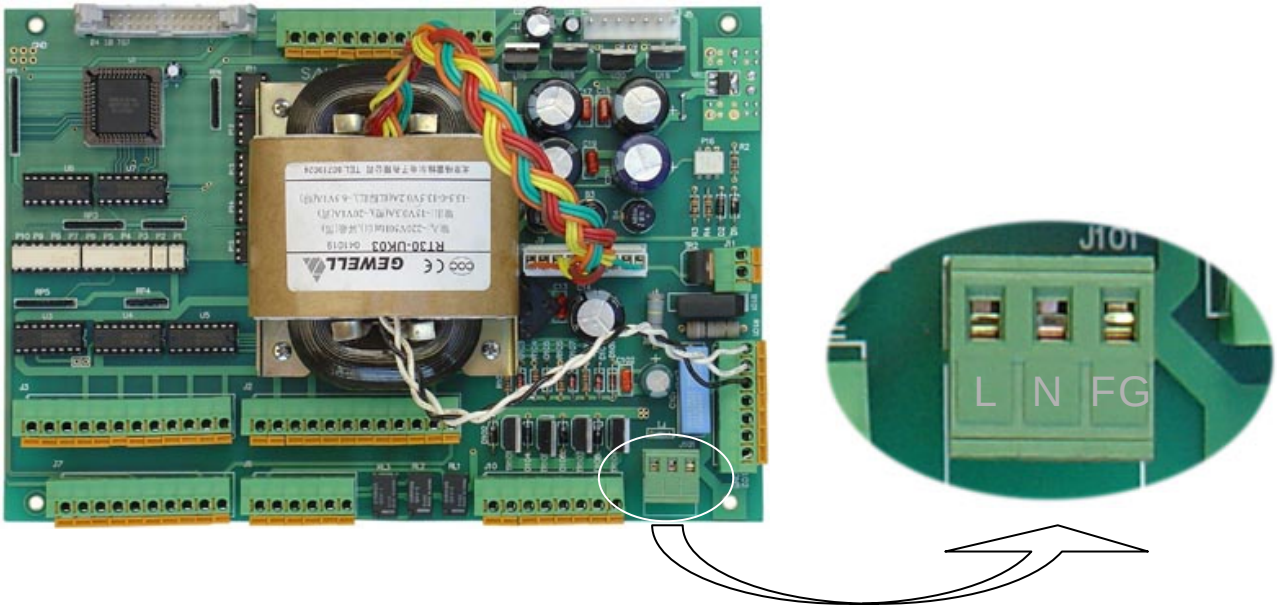

From the left to the right：**L** – Live, **N** – Neutral, **FG** – Grounding

* Make sure the Grounding wire is reliable.

2.4.1.2 Connection of isolated current output

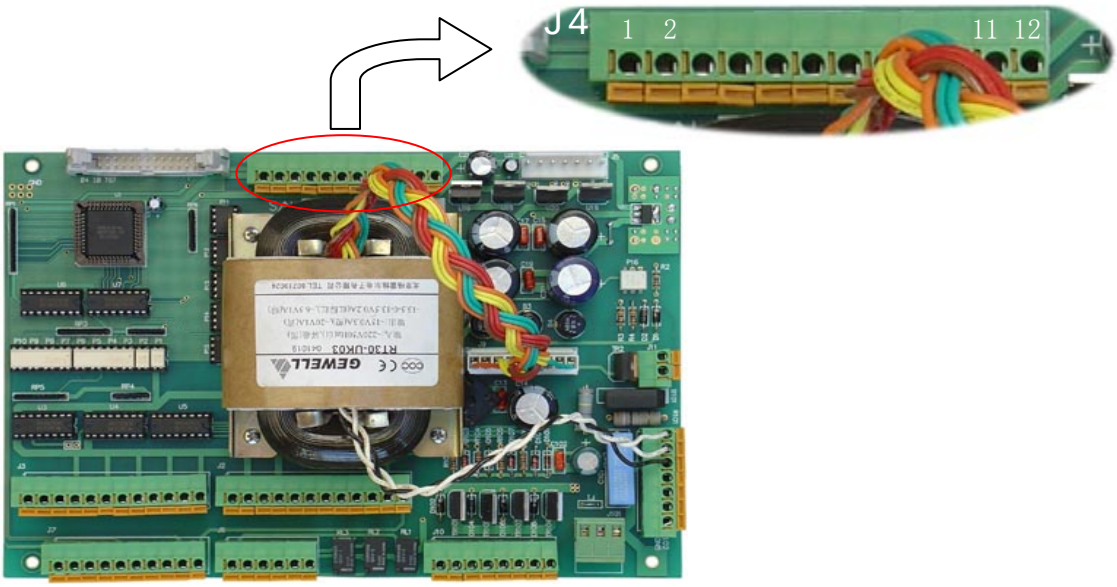

Isolated current output terminals from left to right: Channel 1 to Channel 6, there are 12 holes, the left side is positive and right is negative.

Terminal block(J6)	Definition	Ch. 1		Ch. 2		Ch. 3		Ch. 4		Ch. 5		Ch. 6	
		+	-	+	-	+	-	+	-	+	-	+	-
	Order No.	1	2	3	4	5	6	7	8	9	10	11	12

WARNING

Use shielding cable, and single termination to the ground so as to shield.

2.4.1.3 Alarm relay output connection

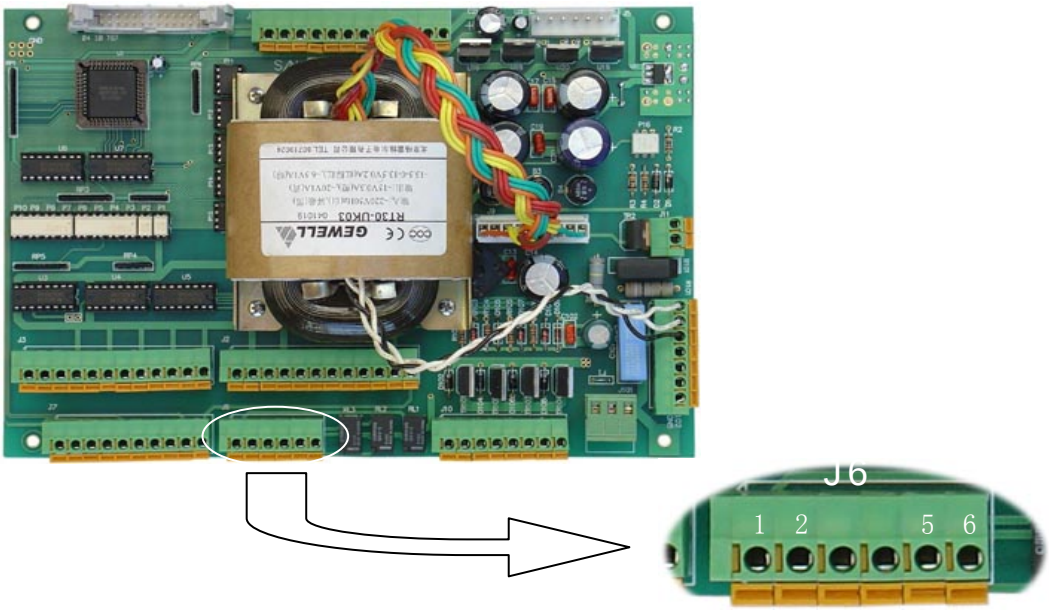

Three alarm outputs from left to right: high alarm, low alarm, out-of-sample alarm. Any alarm in the channel will lead to the movement of corresponding relay.

Terminal block (J6)	Definition	High-Limit alarm		Low-limit alarm		Out-of-Sample alarm.	
		COM	NO	COM	NO	COM	NO
	Order No.	1	2	3	4	5	6

Warning

High alarm, low alarm and out-of-sample alarm will provide lower power switch signal for users, if you want to control high power instrument, increase intermediate relay to improve the load capacity.

If the relays are used to switch loads on and off, the relay contacts will be eroded by arcing. Arcing also generates radio frequency interference (RFI) which can result in instrument malfunctions and wrong display. To minimize the effects of RFI, arc suppression components are required. Resistor/capacitor networks for AC applications and diodes for DC applications. These components can be connected either across the load or directly across the relay contacts.

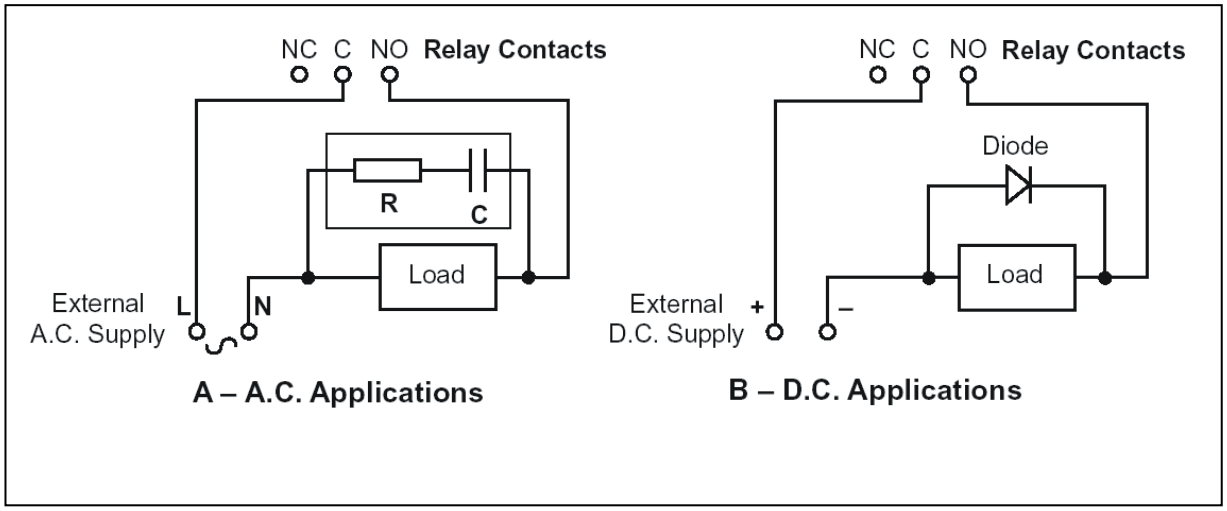

Figure 2.1 Relay contact protection

For AC applications the value of the resistor/capacitor network depends on the load switch current and inductance. A 100R/0.022 μF RC suppressor unit can be used at the beginning as shown in Fig 2.1**A**. If instrument malfunctions and wrong display occur, it means the RC network value is too low and should be changed. If the correct value cannot be obtained, contact the manufacturer for details that RC unit required.

For DC applications fit a diode as shown in Fig. 2.1**B**. IN5406 type is generally used in diode (inverse voltage 600 V, 3A).

2.4.2 Factory electric connection

NOTE

Factory electric connection has already finished and there is no need for users to carry out, it's only used in meter maintenance

2.4.2.1 Singe-channel solenoid valve and liquid-level switch connection

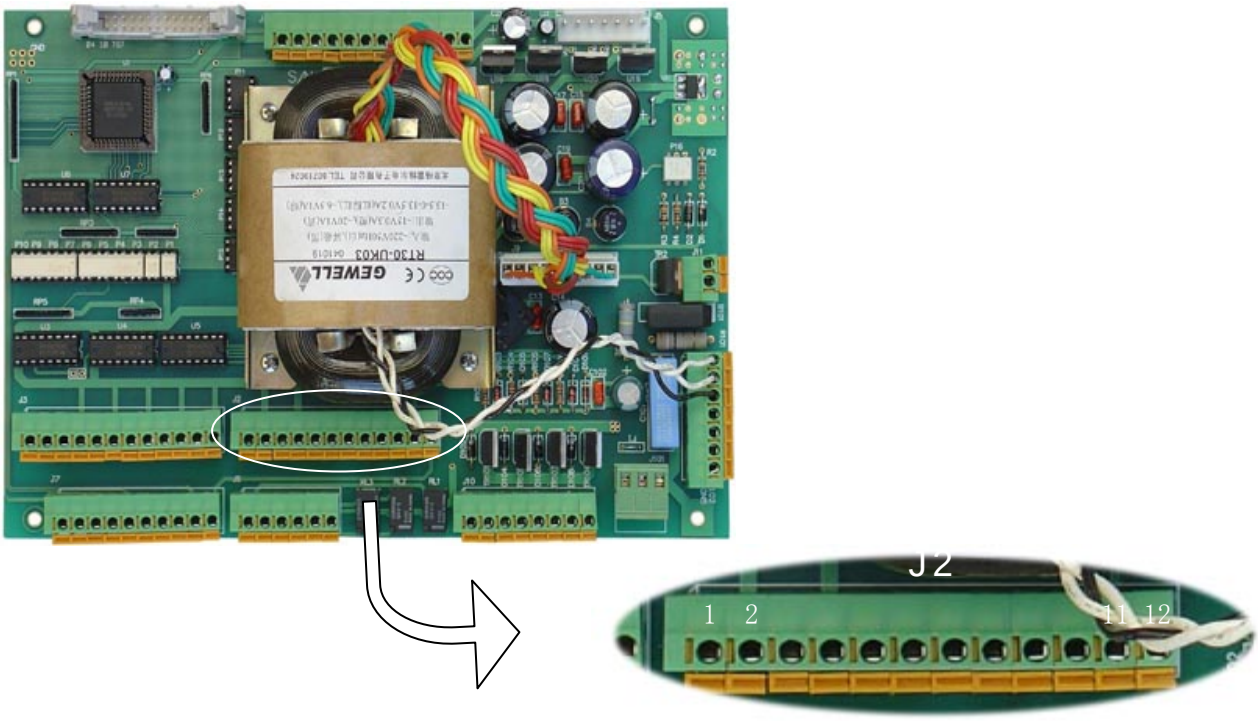

Terminal block(J2)	Definition	Sample valve		calibration valve		Mixing valve		Draining valve		Volume valve		Liquid level detector(Ch1)	
	Order No.	1	2	3	4	5	6	7	8	9	10	11	12

2.4.2.2 Multi-channel sample valve and liquid level switch connection

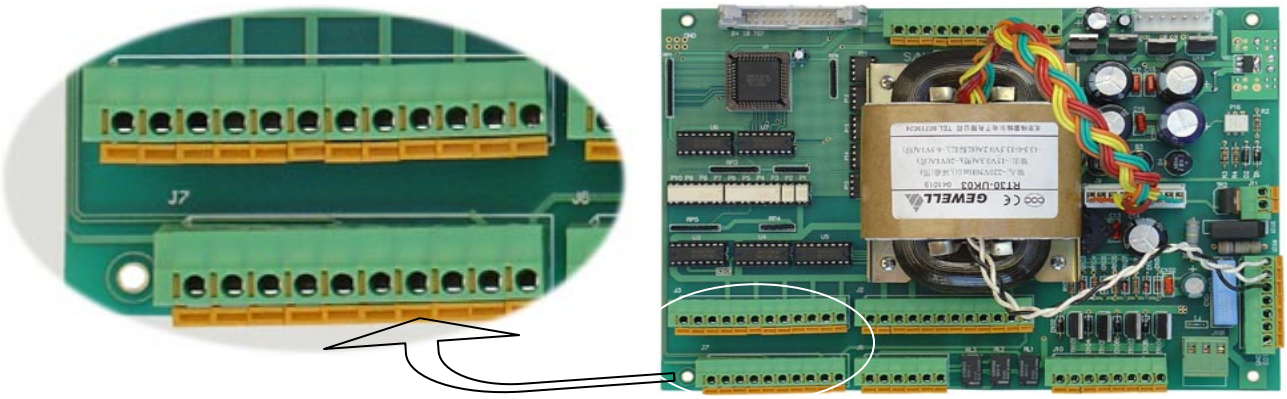

The upper blocks are channel valve terminals, the left two wires are blank. The lower blocks are Liquid Level Sensor terminals

Terminal block (J3)	**definition**	N/A		Sample valve 6		Sample valve 5		Sample valve 4		Sample valve 3		Sample valve 2	
	Order No.	1	2	3	4	5	6	7	8	9	10	11	12
Terminal block (J7)	**Definition**	Liquid level sensor (Ch6)		Liquid level sensor r (Ch5)		Liquid level sensor (Ch4)		Liquid level sensor (Ch3)		Liquid level sensor (Ch2)			
	Order No	1	2	3	4	5	6	7	8	9	10		

2.4.2.3 Dosing pump connection

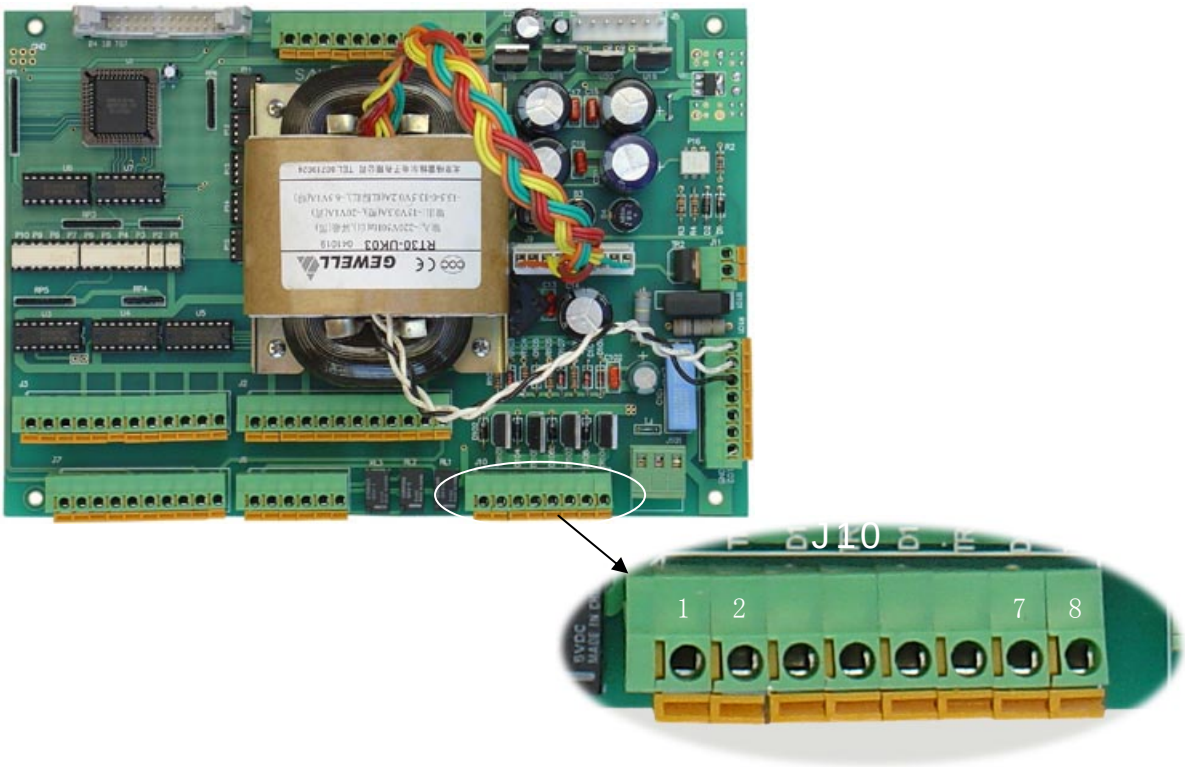

Terminal block (J10)	**Definition**	Dosing pump 1		Dosing pump 2		Dosing pump 3		Dosing pump 4	
		+	-	+	-	+	-	+	-
	Order No.	1	2	3	4	5	6	7	8

2.4.2.4 Power switch terminal and stir pump terminal

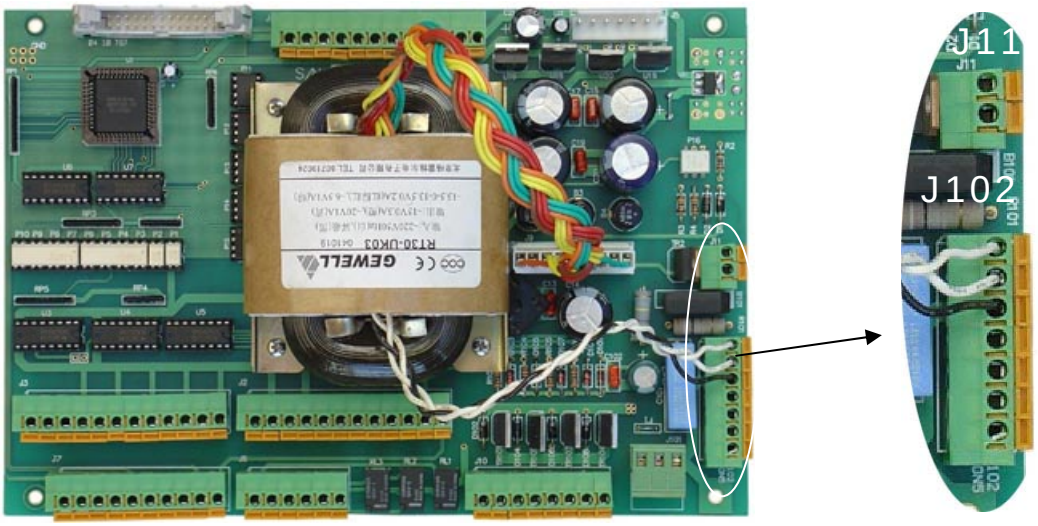

J 102 is the terminal of transformer and power switch, order from top to the bottom is transformer (line color is: white, white, black), power switch out (line color: blue, red), power switch in (line color: blue, red). J 11 is the stir pump terminal without polarity requirement.

3. SOLUTIONS PREPARATION

3.1 General Description

The reagent should be stored in a special label marked plastic bottle with volume of 3L. Before use, wash the bottle with detergent and water, and then rinse several times with de-ionized water. All the reagents should be fresh and of highest quality grade. The sample water must be ultra pure water, it is better use de-ionized water produced by high performance mixing-bed ion exchange device. (Its conductivity is less than 0.2 μS/cm).

ATTENTION:

Be sure to read instruction about health and safety protection before preparing the reagents, put on exposure suit and take measures to protect eyes.

3.2 Preparation Method

If the condition allows, the solutions should be fresh and stored in polyethylene bottles.

3.2.1 Reagents Preparation

Chemicals Required: Ammonium Molybdate: $(NH_4)_6Mo_7O_{24}4H_2O$

Ammonium meta-vanadate: NH_4VO_3

NOTE:

Take 1L reagent for example, preparation of other volume should be in proportion to this example.

① Weigh 50g ammonium molybdate and 2.5g ammonium meta-vanadate, then dissolve them in 400mL desalted water.

② Weigh 195mL concentrated sulphuric acid (weight 1.84), gently add it into 250mL desalted water under continuous stir, cooling it to room temperature.

③ Pour solution ② into solution ①, then dilute to 1L with desalted water.

3.2.2 Preparation for stock solution（1000mg/L）

WARNING

Be careful to take concentrated Sulfuric Acid , when diluting, **sulfuric acid must be poured into water, absolutely not water pour into sulfuric acid.**

4. PROGRAMMING

4.1 Power on

Apply power to the analyzer after all the installations and connections are verified and secure, power on the instrument and the welcome interface appears:

HK-108W PHOSPHATE
ANALYZER

Software Version: 2.0

Beijing Huakeyi Power Plant
Instrument Research Institute
HTTP:// WWW. HUAKEYI.COM
010-80705660

This interface will last for 6 seconds. Then the system enters to the single channel display automatically.

Note: Before power on the instrument, press + key and key simultaneously will lead to reset. In this way, all the parameters can be recovered back to factory default values, and all the stored data will be cleaned.

4.2 Program Unit

4.2.1 Single Channel Display

After switch on the instrument, you will see the welcome interface and it lasts for 6s. Then the system enters to ”Single Channel Display” automatically.

Sampling channel: 2 0115/0240s
Display channel: 1

3.62 μg / L

Blank : 4502 mV
Measure: 2703Mv

2008-06-02 14: 32: 42

This is “Single Channel Display” submenu;

- Press “Enter” key to enter “History Curve”;
- Press “Esc” key to enter “History Event” submenu;
- Pres +, − keys to switch between “Single Channel Display” and “Multi Channel Display”;
- Press Up, Down, Left and Right cursor keys to enter “Password” interface, input correct password to enter the Main menu.

Single channel display:

- “Sampling channel”: Indicate its measuring channel. It’s channel 2 as shown in the figure.
- “Display channel”: indicate channel value, as channel 1 data shown in the figure.
- “Display value”: display measured results. It’s 3.62μg /L shown in the figure.
- “Measure process”: Display time for a measure on the top right corner (it’s 240s as shown in the figure:) and the already spent time.
- “Blank”: Voltage value for sample without any reagent in it. It’s used in shielding measurement error caused by zero drift and sample turbidity. It’s 4502mV as shown in the figure.
- “Measure”: Display current actual voltage without start up the manual test.
  When start up manual test, display not only current actual voltage but also measured voltage that involved in calculation.
- “System time”: display current date and time on the bottom of the screen.

In some case, it will display the following contents:

- “Out-of-Sample alarm”, “High alarm” and “low alarm”: indicate this alarm has already happened, inquire in multi-channel display for specific channel. It only alarms when there is corresponding alarm condition. Meanwhile, “High Alarm” and “Low Alarm” will disappear when “Out-of-Sample Alarm” happens.
- Enter this interface whenever calibration process start. “Sampling Channel” and “Display Channel” will not appear, the corresponding appearance are “zero calibration (indicate it’s carrying out zero calibration), “slope calibration”, “initial zero”, “ initial grade 1,2,3,4…”.

4.2.2 Multi-Channel Display

In “Single Channel Display” interface, press +, − keys to switch to “Multi-Channel Display” interface. The Multi Channel Display” is showing below:

2008/06/01 15:34

Channel	1	2	3	4
Time	15:.00	15:10	15:20	15:30
Conc	3.62	4.26	1.84	2.36
Unit	mg/L	mg/L	mg/L	mg/L
Alarm				
Sample				

Last Cal. Time: 2008/05/08

In “Multi Channel Display” interface, the key functions are the same with those of “Single Channel Display” interface, see Fig 4.2.1::

- System time: display current system time and date on the top of the screen.
- Channel: current channel should be the same with “channel and alarm setup”, if select channel 1 as open, it will only display the corresponding parameters of channel 1.
- Time: The time when finished measurement.
- Concentration: The value of actual measurement, reflecting sample state of this channel.
- Unit: The measure unit of Phosphate analyzer is mg/L.
- Alarm: “high alarm” will display when measured value is higher than setup value, and the corresponding relay will react.
- Sample: Display “Out-of-Sample Alarm” when there is no sample or not enough sample for measure, this channel will stop measuring and leap to the next channel. If there is no flow in the start up channel, the meter stops measuring.
- Last calibration: last calibration time of the meter.

4.2.3 Main Menu

In the running picture, press any direction keyto input the correct password, then press the “Enter” key to enter the main menu.

Main menu

1. Channel and Alarm Setup
2. Calibration
3. Hardware Test
4. Set Parameter
5. History Curve
6. History Event

4.2.4 Channel and Alarm Setup

In the main menu, move the cursor to the “Channel and Alarm Setup”, then validate with “ENTER” as below:

Channel and Alarm Setup

Channel	1	2	3	4	5	6
State	Run	Run	Run	Run	Stop	Stop
O.P. Span	10.0	10.0	10.0	10.0		
O.P. Zero	0	0	0	0		
High Alarm	8.0	8.0	8.0	8.0		
Low Alarm	2.0	2.0	2.0	2.0		
Level Alarm	Open	Open	Open	Open		
O.P. type	4-20	4-20	4-20	4-20		
O.P. test	online	online	online	online		
Ch. time	5	5	5	5		

Among which:

Status: There are two states, "Run" and "Stop". Select "run", this channel will work. Select "Stop", the channel won't work, and the parameters will not display.

O.P. Span: The maximum value of current output which corresponds to the high-limit of output type. Range: 0.1~20.0, Step: 0.1(Default: 1.0)

O.P. Zero: The minimum value of current output which corresponds to the low-limit of output type. Range: 0.0~(Output full scale deducts 0.1), Step: 0.1(Default: 0), For example: the O.P. Span is "10", the O.P. Zero is "0", the O.P. Type is "4~20", then 0mg/L corresponds to 4mA, 10mg / L corresponds to 20mA.

High Alarm: Set high alarm of the channel, Range: 0.2~20, Step:0.1. If it reaches to 20 and still increases, it will display "OFF".

Low Alarm: Set low alarm of the channel, Range: 0.0~20, Step: 0.1. If it reaches to 0.0 and still decreases, it will display "OFF".

Level Alarm: It will decide if the "out-of-sample test" is open. There are two states: On/Off. When set as "On", it will display "Sample Alarm" in the screen when there is no sample in some channel. The meter will stop measuring and leap to the next channel, and the corresponding relay will react. When set as "Off", the meter will work normally no matter there is sample or not.

Output Type: Set current output type, There are 3 options: (4~20)mA, (0~20) mA and (0~10)mA.

Output Test: Manually control the current output of the channel, there are 3 options:

Output range: 0~100%, step: 10%.

Online output: When it reaches 0% and still decreases, it will display "Online", the online output will be corresponded to the test value and parameters.

Online maintenance: This function is effective only when selecting it in the submenu.

Ch. Time: Time spent in this channel for a measurement. Range: (4～60)min, step: 1 min.

After setup, press "Enter" to save all the parameters and return to the main menu.

4.2.5 Calibration

In the main menu, move the cursor to the “Calibration”, then validate with “Enter” key as below:

Calibration

Last Calibration:	2008/05/08 15:34
Standard Solution:	40 μg / L
Calibration type:	Zero
Auto calibration:	Off
Calibration interval:	240 hours
Manual test:	Disable
Manual Calibration:	Run
Initial Calibration:	Run

Zero:	0 μg / L	4056	0.0
Slope:	4.0 μg / L	3426	1.00

Note:

Last Calibration: The time of the last calibration, It can not be revised manually.

Standard Solution: Set the concentration of standard solution used for calibration. Range: 1~2000, Step: 0.1umg/L.

Calibration Type: Two calibration methods: Zero, Slope

Auto Calibration: Two states: ”On” and ”Off”. Refers to 5.2.3.

Calibration Interval: Set period of Auto Calibration, Range: 1~255 hours, Step: 1 hour.

Manual Test: When set as “Enable”, use sample in standard solution container. It can also judge precision of measurement, or manually test concentration of samples.

Manual Calibration: Press ENTER key at run position, the instrument start calibration, refers to 5.2.2.

Initial Calibration: Press ENTER key at run position to enter “Initial calibration” interface, refers to 5.2.1.

Zero, Slope: The data is the latest results of auto calibration or manual calibration which can not be revised.

NOTE

Start up the manual test function, inject the sample into the Standard Solution Container to measure the sample. This method can measure concentration for a sample.

When calibrating, the meter will switch to “Single Channel Display” interface. After calibration, it will return to the previous interface. If the data in this menu is revised, press “Enter” to store and return to “Main Menu”.

4.2.6 Hardware test

In the main menu, move the cursor to “Hardware Test” menu and validate with “ENTER”, as the following figure:

```
Hardware Test

Reagent pump    Close      Dosing valve       close
Stir pump       Close      Mix valve          close
                           Drain out valve    close
                           Calibration valve  close
                           Channel valve 1    open
Measure: 3200mV            Channel valve 2    close
Ref.: 2700mV               Channel valve 3    close
                           Channel valve 4    close
                           Channel valve 5    close
                           Channel valve 6    close
```

Turn on or off the valve manually in the Hardware Test submenu to test if the valve works well, it can also detect the state of pump.

- Press direction key “+”, “-“ to change the “on”, “off” state on the right side of the hardware. When the reagent pump is in open state, it will display pump switch times on the right side.
- Voltage value on the right side is the signal value for photoelectric detection circuit, it can’t be changed manually.
- If enter this menu and change hardware state, it will stop measuring and restart till return to Hardware Test submenu.

4.2.7 Parameter adjust

In the main menu, move the cursor to “parameter adjust ” and validate with “Enter”, as the following figure:

```
Parameter adjust

Zero modification:        0
Slope modification:     1.00
Password:              0000

Time setup:

2008 / 06 / 02          11: 24
```

Among which:

Zero Modification: when there is deviation between measured value and actual value, modification is necessary, and modified value will add on measured value, range: (-1.0~+1.0), step: 0.1.

Slope Modification : similar with zero modification, multiply modified value with measured value, range: (0.80~1.20), step: 0.01.

Password: user can modify the password.

Time setup: set inner clock.

When zero modification or slope modification, there may be changes in display and output. For example, after calibration, measured value of 4.0mg/L standard solution is 4.0, if zero modification is -0.5, slop modification is 1.00 (default slope), so display value is 3.5 mg/ L, if modify the slope as 0.9, zero as 0 (default zero), so display value will be 3.6 mg / L.

Note

- Be careful to carry out Parameter Adjust, improper measurement may bring large deviation.
- Zero modification, move the curve horizontally; slope modification, change the elevation of the curve.

Press “Enter” to store the changed data, and return to the “Main Menu”.

4.2.8 History curve

In the main menu, move the cursor to “History Curve” and validate with “Enter”, or press “Enter“ key under the running interface, showing below:

History curve
Date: 2000/03/10
Channel: 1
Coordinate: 10
mg/L

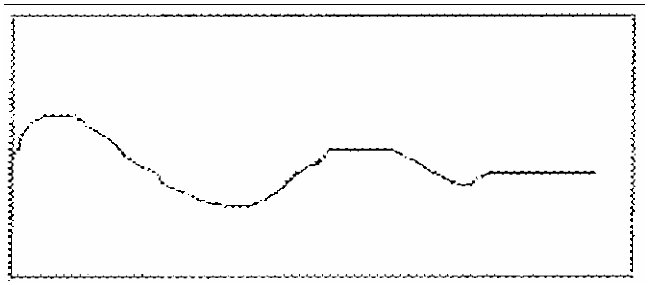

- Display the current data when entering the interface.
- Review the data by using the direction keys, The Up/Down keys to page up and page down, the right/left keys to move to the adjacent items.
- Three items can be manually modified: date, channel, coordinate limit.
  Date: input year, month, day to carry out quick inquiry.
  Channel: 6 channels at most, input corresponding channel number to inquire data.

Coordinate limit: display maximum concentration of coordinate.

Setup method: press “Enter”, the cursor will leap to year, set the corresponding parameter in accordance with <+>, <-> and direction keys, and press “Enter” to display after setup.

4.2.9 History Event

In the Main Menu, move the cursor to History Event and validate with “Enter”, or press “Esc” key under the running interface to enter History Event submenu, showing below:

History event

2000/05/24 14:30	Auto Calibration
2000/05/24 14:50	Ch1 Hi. Alarm
2000/05/24 15:30	Manual Cal.
2000/05/24 15:40	Ch2 low alarm begin
2000/05/24 16:30	Ch2 low alarm finish
2000/05/24 17:50	Ch1 No flow alarm
2000/05/24 17:50	Initial Cal.
2000/05/24 19:30	Ch1 hi. alarm finish
2000/05/24 19:50	Auto cal.
2000/05/24 20:10	Power off
2000/05/24 20:20	Power on
2000/05/24 20:30	Power off

History event menu, record some important operation or modification for inquiry.

- Display the current data when entering the interface.
- On the left side displays the date and time of event, right side displays the content of the events.
- Event includes: power on, power off, automatic calibration, manual calibration, initial calibration, output test, hardware test, change sample inlet order, change the password, (channel※) high alarm begin, (channel※)end of high alarm, (channel※) low alarm begin, end of low alarm (channel※), (channel※) liquid alarm begin, (channel※) end of liquid alarm, change high alarm (channel※), change low alarm (channel※), change liquid alarm (channel※), change output type, change the channel time, change output full-scale, change output zero, (channel※) close, (channel※) run.

Press “return” to running interface.

5. PUT INTO RUNNING

5.1 Startup

Note

Do not apply power to the meter until all the electric connections are verified and secure. The programming section of this book must be read carefully.

Warning

Do not power on the meter until ensuring the sample is clean, especially there may be some residue left in flow system for the first use. Wash completely before infusing sample so as to avoid trapping.

Apply power to the meter, program and set parameters based on your requirements.

This work may take you several hours when debugging for the first time or after long-term out-of-use.

1. Using channel needle valve to adjust the sample flow rate so as to get well-distributed sample which does not contain any air bubbles, flow rate should be between (100~300)ml/min.
2. For multi-channel meter, each channel should repeat the procedure above.
3. In the Main Menu, enter the Hardware Test submenu and switch on the reagent pumps, pump the reagent till it infuses into mixing cup.
4. Run the instrument for 4 hours, if possible, let the instrument run over night.

Suggestion

When the reagent tube is empty, it's difficult to pump the reagent in by using reagent pump, so we suggest, put the bottle of the reagent higher than the pump, then open the pump until the reagent fully infuse to the Mixing Cup.

Caution

Be sure that there is no bubbles inside the reagent tube, the reagent and sample should flow normally inside the tube and all the solenoid valves work in normal condition.

5.2 Calibration

Note

When solution doesn't flow smoothly, inject more calibration solution into the standard solution container and recalibrate.

5.2.1 Initial Calibration

Set a curve coordinate system for phosphate content and corresponding absorbency for precise measurement. The curve is a fold line consisted of several line segments of different slopes, both end of the fold lines are two radial. The inflexion of the fold line is determined by standard solution that provided by the user, this process is finished by initial calibration.

It's only necessary to do initial calibration when the instrument is for first time use or after long-term out-of-use.

We suggest before initial calibration or putting into use, run the instrument for over night. For this, the samples and reagents should be connected into the system.

Steps:

1. Rinse the flow system with desalted water before zero calibration.
2. Enter the main menu and move the cursor to "Calibration", press the ENTER key to enter the calibration submenu.
3. Press "down" to move the cursor to "manual test", and press "+" to change "disable" to "enable".
   Return to measure interface, "manual test" typeface appears on the left side of the screen. Under manual test state, inject 100mL desalted water into the standard solution container and the system will run automatically, finally draining out the desalted water and rinse finished.
4. Enter the calibration menu again, move the cursor to "initial calibration" and validate with "Enter", as shown in the follow figure.

:

Initial calibration		
Standard Conc.	0000	Start
Calibration data:		
Blank :	-07 μg / L	4200
Zero:	0 μg / L	4000
Grade 1	4.0 μg / L	3800
Grade 2	10 μg / L	3200
Grade 3	14 μg / L	2800
Grade 4	20 μg / L	1800

5. Move the cursor to "Start", inject 100mL desalted water into the standard solution container, and press "enter" to start initial zero calibration.
6. When zero calibration, the meter will return to measure interface, "initial zero…"appears on the left top side of the screen.
7. It will take 240s for initial zero calibration, return to calibration menu after calibration.
8. Move the cursor to value of "standard concentration", open the channel valve, drain out desalted water and

then close the valve.

9. Inject 100mL standard solution into standard solution container, open the valve and then drain out standard solution.
10. Press “+” to input standard solution concentration.
11. Inject 250mL standard solution into standard solution container, move the cursor to “start”, and validate with “Enter” to start calibration.
12. When STD 1 calibration, the meter will return to measure interface, “initial grade1…” appears on the right top side of the screen. Repeat step 8~11 if required, carry out other calibration.
13. End of initial calibration, drain out residue in the standard solution container, and rinse it with desalted water. Press “Esc” to save the results and return to measurement interface.
14. Enter to calibration menu, move the cursor to “Manual Test” and change the “enable” to “disable”.

Note

Step 8, 11 is used to wash the flow way with new standard solution, to avoid the calibration being influenced by residue in last calibration, you can also rinse the standard solution cup manually.

End of initial calibration 1, Then you can quit calibration process or carry out other calibration. Grade 2, grade 3 and grade 4 are optional, measurement range should be (0~100)μg/L. calibration 1 is needed.

5.2.2 Manual calibration

When reagent changes, meter maintenance or there is deviation in measured value, manual calibration is required. It includes “zero calibration” and “slope calibration”. Desalted water used in zero calibration and standard solution used in slope calibration. Process as follows:

1. Rinse the flow way system, inject 100mL solution into 100mL standard solution container, open “calibration valve” in “Hardware Test” menu, , drain out solution in standard solution container (step 2, 3 in initial calibration can be used, “Manual Test” must be set as “disable” after calibration)
2. Inject 250mL standard solution into the standard solution container.
3. Select calibration mode: enter “calibration” menu, and move the cursor to “calibration mode”, use “+” to change calibration mode.
4. Set standard solution concentration: move the cursor to “standard solution”, press “+”, “-“ to input concentration.
5. Move the cursor to “Manual Calibration”, press “Enter” to carry out calibration.

5.2.3 Automatic Calibration

After the instrument is initial calibrated, the automatic calibration can be used if necessary. The only thing user should do is to set parameters in the Calibration menu according to your requirement. The automatic calibration includes “zero calibration” and “slope calibration”, Desalted water is used in zero calibration and standard solution is used in slope calibration. Process as follows:

1. Rinse the standard solution container, and inject 100mL standard solution into it, open “calibration

valve" in "Hardware Test" menu, drain out the solution in standard solution container, then fill it with calibration solution.

2. Enter to "calibration" menu, move the cursor to the "standard solution concentration", and press "+" "-" to input standard solution concentration.
3. Move the cursor to "calibration mode", press "+" to change calibration mode.
4. Move the cursor to "calibration interval", press "+" "-"to input automatic calibration interval, setup range is (1~255) hour.

After setup, press "enter" to return.

Warning

Capacity of standard solution cup is limited, if set as automatic calibration, observe the standard solution at any time, replenish in time when solution is used up, to avoid great error in measured value.

5.3 System disable

5.3.1 Temporary stop working

The meter can be left with the pump switch off for hours without any precaution, the only thing you should do is to turn off the power.

5.3.2 Long-term stop working

If the instrument stops working for several days or several weeks, some protective measurement should be taken to make sure the instrument will be re-started without any trouble.

1. Put reagent tubes into de-ionized water, under "Hardware Test" menu, pump de-ionized water and drain out reagents to ensure cleanness of reagent tubes.
2. To avoid the reagent creating boundary layer on the wall of pipes when flowing through, the mixing cup and colorimeter cell should be rinsed with de-ionized water.
3. After rinsing, switch off the power.

After a period of time, when you restart the instrument, it needs to prerun for several hours, and better to do initial calibration again.

5.4 Meter maintenance

Regular maintenance can ensure normal work and correct analysis.

- Per 30 days

  Check liquid level of reagent container, replenish in time when the solution is used up, carry out manual calibration after changing new reagent.
- Replenish solution according to interval of automatic calibration.

6. SPECIFICATIONS

Measurement Range: (0～20) mg/L

Display Error: ±2%F.S

Repeatability: ≤1%

Measurement interval: ≥4min

Stability: Base line Drift: Blank Calibration.

Chemical Drift: ≤1% reading / month (depend on the stability of reagent)

Sample conditions: Flow: (150~300) ml/min

Temperature: (5~50)℃

Pressure: 14 KPa

Solid content permitted: ≤5μm (no gel)

Ambient Temperature: (5~45)℃

Relative humidity: ≤90%RH (no condensing)

Reagent kind: 1 kind

Reagent Consumption: ≤9 L/30 days/ one kind (4 kinds of reagent)

Display: 320×240 lattice LCD display in English and Chinese

Isolated output: (0~10) mA, (0~20) mA, (4~20) mA

Power supply: (220±22)VAC Frequency: (50±1)Hz

Power: 150W

Dimension: (690×450×215)mm (H × L× D)

Cutout Dimension: (645×410) mm

Weight: 22kg

Alarm: Out-of-sample, high-limit, low-limit alarm

Appendix 1: Tree Diagram of Meter

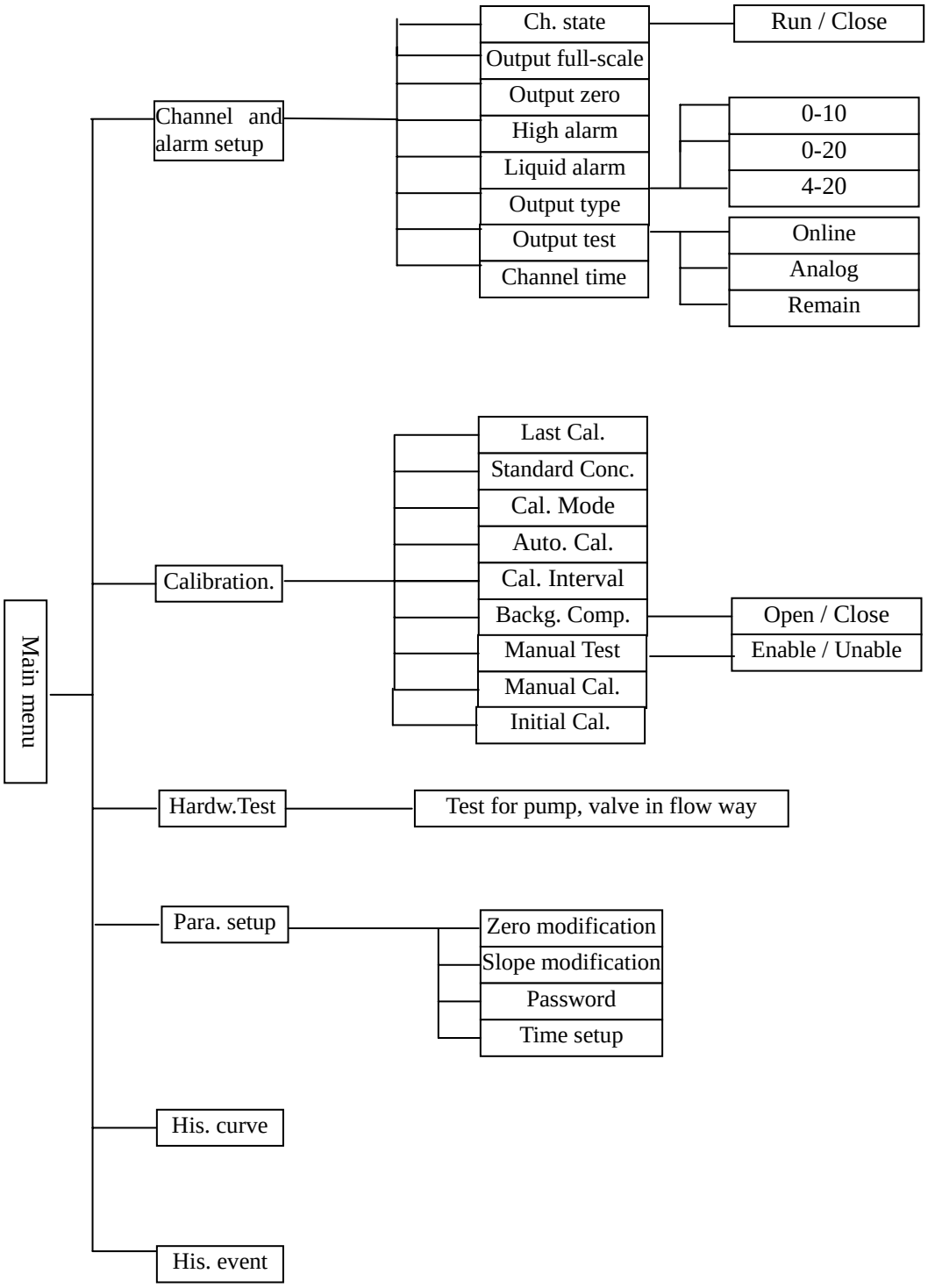

Appendix 2: Working Point Adjustment Of Phosphate Analyzer

Photometer is different from other accessories, adjust the work point of th ıging the transmit unit or receive unit, calibration process is shown below:

1. Refer to “fig. 2 analyzer front view”, detach the main board front cap and photometer cap, replace the transmit unit (on the left side of the color meter) or receive unit (on the right side of the color meter)

2. Inject 100 mL desalted water into the cup, operate the analyzer and enter to “hardware test” menu, close all the valves except for calibration valve and mixing valve, fill the color meter with desalted water.

Hardware Test

Reagent pump	close	Meter valve	close
Stir pump	close	Mixing valve	close
		Drain out valve	close
		Cal. valve	close
		Ch.1 valve	open
		Ch.2 valve	close
Measure: 3200 mV		Ch.3 Valve	close
Parameter: 2700 mV		Ch.4 Valve	close
		Ch.5 Valve	close
		Ch.6 Valve	close

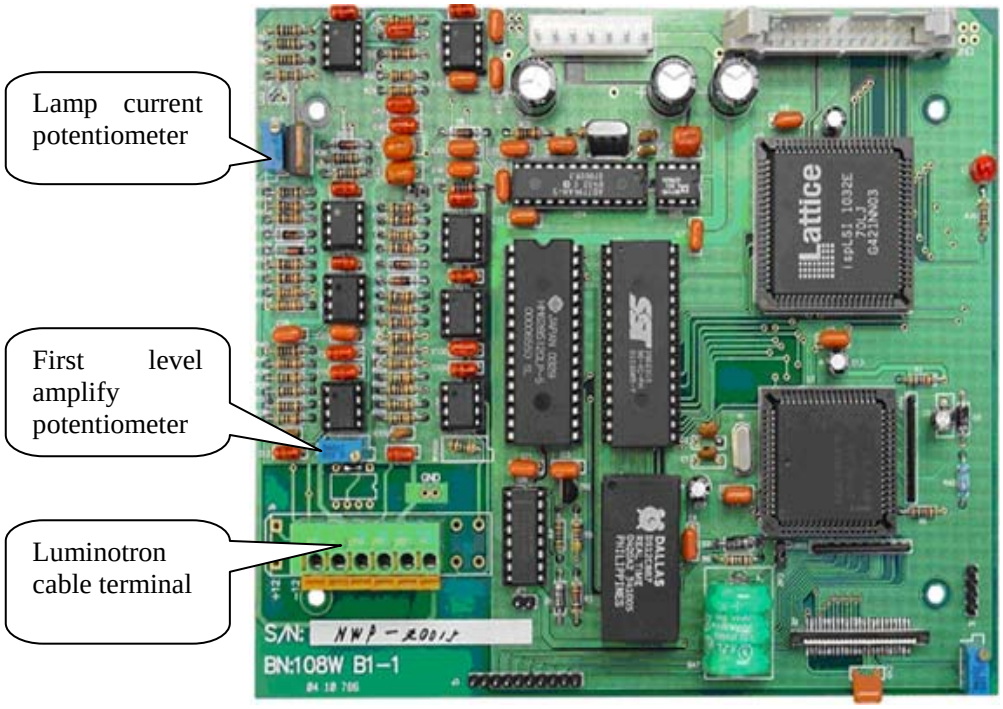

3. Detach LED connector which located on the main board(5th or 6th hole of luminotron cable terminal), connect with multi-meter current, adjust “lamp current potentiometer”, and set lamp current as (2-6)mA, reconnect the line cable.

4. Adjust “first level amplify potentiometer”, observe voltage value displays on the screen, set the voltage as 4400mV.

Appendix3: Accessory list

Name	Order No.	Description
108W main board	04.03.12	108WB1-1-P
118W power board (1~6channel)	04.03.15	108WB3-2-S
LCD display	01.01.07.02	
108W panels and membrane button	01.08.01.03.01	108W-MJ
Colorimeter cell	01.03.06.11	B50-1
Colorimeter cell	01.03.06.03	B25-1
108W photometer component	04.03.22	ZB20-420
108W photometer component	04.03.23	ZB2-420
108W photometer component transmit unit	04.03.41	Z420B
108W photometer receiving unit	04.03.48	Z1227B
(Phosphorus, hydrazine) Reagent tube	04.03.50	TYGON 1.6-1
Drain tube	04.12.01.33	190-BO-??-01
PMP (polymethyl methacrylate plastics) filter	04.03.28	GLQ55
Filter core(screw thread)	04.03.51	LX40
Φ6 plastic T-piece	01.04.09.14	Φ6 plastic T-piece
Branching cup components	04.03.30	FLSJ60
Standard solution bottle components	04.03.32	100BYCUP
2 channels solenoid valve	01.04.02.26	6126 A
Drain out solenoid valve	04. 01.19	FFY 22 (contain the joint)
Inlet needle valve	01.13.01.07	100 val
HAILEA stir pump	04.03.43	AC 24V
Phosphorous standard solution (60m L)	04.06.08	P-1 K

Product and client support

Laboratory Instruments

PHS-3C Table –type pH Analyzer
HK-3C Table-type precise pH Analyzer
DDS-307 Table-type Conductivity Analyzer
HK-307 Table-type Conductivity Analyzer
DWS-51 Table-type Sodium Analyzer
HK-51 Table-type Sodium Analyzer
HK-208 Phosphate Analyzer
HK-218 Silica Analyzer
HK-228 Hydrazine Analyzer
HK-258 Portable Dissolved Oxygen Analyzer
HK-268 Acid/Alkali Concentration Analyzer
HK-508 Iron Analyzer
HK-518 Copper Analyzer

On-line Instruments

HK-108C Phosphate Analyzer
HK-108W Phosphate Analyzer
HK-118C Silica Analyzer
HK-118W Silica Analyzer
HK-128W Hydrazine Analyzer
HK-318 Dissolved Oxygen Analyzer
HK-328 pH Analyzer
HK-338 Conductivity Analyzer
HK-358 Sodium Analyzer (Cation Bed)
HK-358 Sodium Analyzer (Steam)
HK-368 Acid/Alkali Concentration Analyzer
HK-600 Channel Distributor
HK-7000A toxic combustible gas alarm control
HK-7000D toxic combustible gas alarm control
HK-7100A combustible gas alarm control
HK-7100Dcombustible gas alarm control
HK-7200A toxic gas alarm control
HK-7200D toxic gas alarm control

Technical Support

Beijing Huakeyi Power Plant Instrument Research Institute
Nancun Industrial Field, Qiliqu, Shahezhen, Changping District, Beijing, P.R. China
Tel: 86-10-80705660
Fax: 86-10-80705682
Email: hky@huakeyi.com
http://www.hky.com.cn
http://www.huakeyi.com

Essential Instruction!

1. **Read all instruction manual prior to installing, operating and servicing the instrument.**
2. **The Analyzer should be stored in an area where is clean and dry.**
3. **Regularly check the status of analyzer.**
4. **I f Meter is failed during warranty, please submit the following documents:**
   a. Alarm logger on failure;
   b. Operation records;
   c. Maintenance records.