C-3102 Conductivity analyzer

C-3102 analyzer is designed for measurement and monitoring of specific electric conductivity (SEC) or concentration of solutions.

Application: water treatment.

In the dairy and brewing industry, it can be used as an indicator of phase separation: water - milk, water - washing solution, etc.

The instrument consists of a sensor and measuring instrument (MI).

BASIC TECHNICAL SPECIFICATION AND PARAMETERS

SENSOR

Measuring range	(0...10); (0...100); (0...1000) µs/cm; (0...5); (0...50); (0...500) mg/l NaCl (0...5) до (0...20) mS/cm
Accuracy	2,0 or 4,0%
Temperature range	(0...100) °C
Reference temperature and temperature coefficient of thermal compensation	set programmatically
Sensor material	SS321
Sensor type	in-line-submersible
Viscosity of the analyzed liquid	< 0,2 Pa·sec
Pressure of analysing liquid	max 1,6 MPa
Sensor protection	IP65
Climatic version sensors	T=(-40..+50) °C
Resistance of the sensor to mechanical influences in accordance with GOST R 52931	V2
Sensor weight	< 0,1 kg

MEASURING INSTRUMENT

Indicator	LED 7segm 4digit
Indicator color	green or red
Set-point alarm	on the SEC and temperature or two on SEC
Output signals:	
- analog	(0...5) mA or (4...20) mA(optional)
- discrete (2 relays)	240V, 3 A
3-wire line length from the sensor to the MI	max 10 m
Supply voltage	~220 V
Power consumption	< 7 VA
Climatic version MI	T= (5..50)°C
Resistance to mechanical influences in accordance with GOST R 52931 (Rus)	N2
Enclosure material MI	aluminum alloy
Dimensions	96x48x120 mm
Weight	< 0,6 kg

The measuring device has a galvanic isolation between the input and the output.

The upper limit of the temperature of the liquid to be analyzed is determined depending on the specific medium.

EXTERNAL WIRING

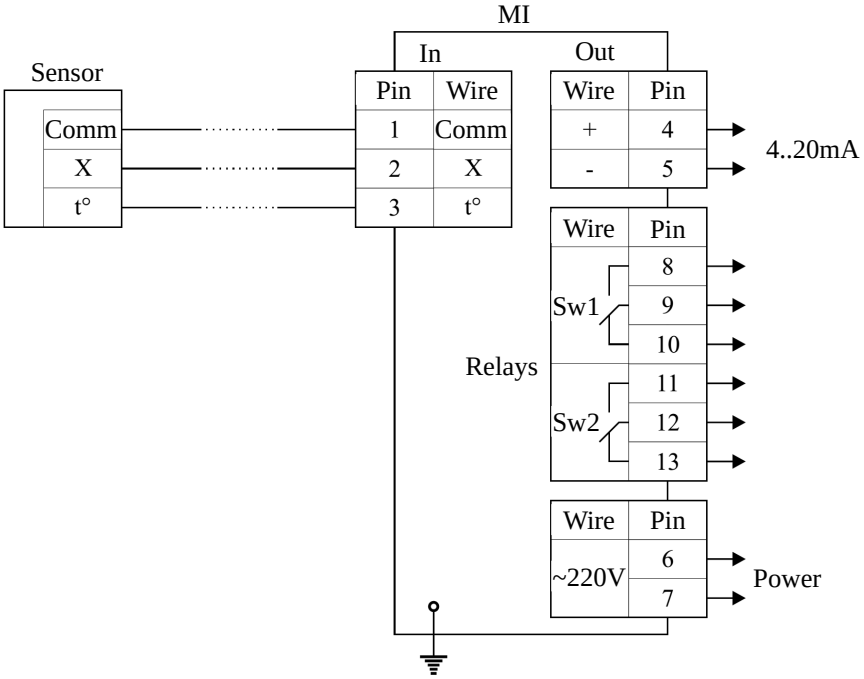

Figure 1. Sensor connection

ENCLOSURE DIMENSIONS

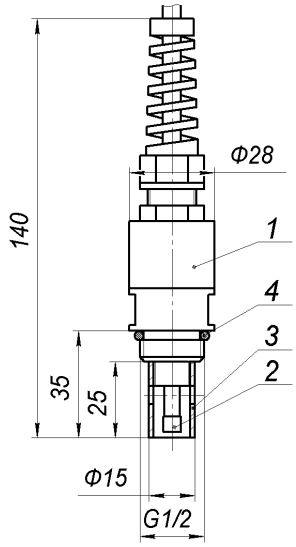

Figure 2. Flow-submersible sensor ECS1.07M
1) enclosure; 2) electrode with an integrated temperature sensor
3) housed electrode; 4) fitting O-ring
(C=0,16 cm^{-1}; 0..20mS/cm)

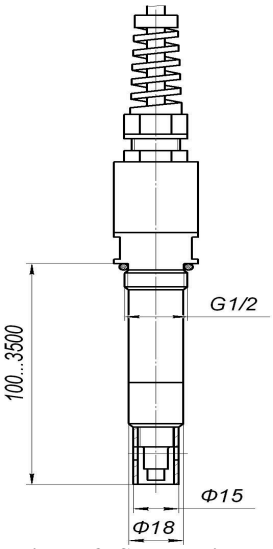

Figure 3. Submersible sensor. ECS-1.07K
(C=0,16 cm^{-1}; 0..20mS/cm)

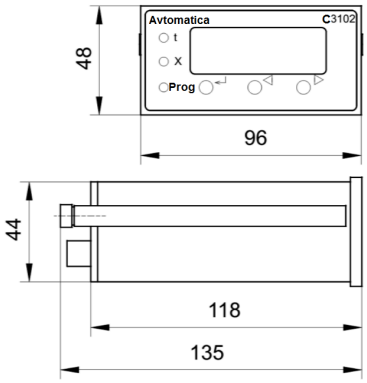

Figure 4.
Measuring instrument (MI)

ORDER REFERENCE CODE:

C3102. **x**

Measuring ranges by modifications:

1	(0...10) µs/cm (with index **K** (0...5) mg/l NaCl);
2	(0...100) м µs/cm (with index **K** (0...50) mg/l NaCl);
3	(0...1000) µs/cm (with index **K** (0...500) mg/l NaCl);
4	from (0...5) to (0...20) mS/cm (by order), (with index **K** from (0...2,5) to (0...10) g/l)

Order reference code explanation:
*«**C3102.3** – Conductivity analyzer,*
measuring range (0... 200) mg/l by NaCl, cable length 3 m, indicator light is red